YAMAHA

212SS • 212X

OWNER'S / OPERATOR'S MANUAL

Read this manual carefully before operating this boat.

212SS & 212X OWNER'S / OPERATOR'S MANUAL

⚠ WARNING

The engine exhaust from this product contains chemicals known to the State of California to cause cancer, birth defects or other reproductive harm.

YAMAHA LIT-CALIF-65-01

Read this manual carefully before operating this boat.
This manual should stay with the boat if sold.

TO THE OWNER

Thank you for choosing a Yamaha Boat. This Owner's Manual contains information you will need for proper operation, maintenance, and care. A thorough understanding of these simple instructions will help you to obtain maximum enjoyment from your new Yamaha. If you have any questions about the operation or maintenance of your boat, please consult a Yamaha dealer.

Because Yamaha has a policy of continuing product improvement, this product may not be exactly as described in this Owner's Manual. Specifications are subject to change without notice.

This manual should be considered a permanent part of this boat and should remain with it even if the boat is subsequently sold.

IMPORTANT MANUAL INFORMATION:
In this manual, information of particular importance is distinguished in the following ways:

⚠ This is the safety alert symbol. It is used to alert you of potential personal injury hazards. Obey all safety messages that follow this sybole to avoid possible injury or death.

⚠WARNING

Failure to follow WARNING instructions could result in severe injury or death.

NOTICE:

A NOTICE indicates special precautions that must be taken to avoid damage to the boat or other property.

TIP: A TIP provides key information to make procedures easier or clearer.

212SS (FAT1100C-H, FAT1100CL-H)
212X (FAT1100A-H / B-H, FAT1100AL-H / BL-H)
OWNER'S/OPERATOR'S MANUAL

© 2008 by Yamaha Motor Corporation, U.S.A.
1st Edition, July 2008
All rights reserved. Any reprinting or unauthorized use without the written permission of Yamaha Motor Corporation, U.S.A. is expressly prohibited.
Printed in U.S.A.
LIT-18626-08-23
08-443

212SS/212X

SAFETY INFORMATION 1

FEATURES & FUNCTIONS 2

OPERATION 3

MAINTENANCE & CARE 4

TROUBLE RECOVERY 5

CONSUMER INFORMATION 6

YAMAHA

Chapter 1
SAFETY INFORMATION

IDENTIFICATION NUMBER RECORDS 1-1
Primary I.D. Number 1-1
Hull Identification Number (H.I.N.) 1-1
Engine Serial Number 1-1
Star Labels 1-2
Emission Control Information 1-3

IMPORTANT LABELS 1-4
Location 1-4
Labels 1-5

SAFETY INFORMATION 1-8
Limitations On Who May Operate the Boat 1-8
Required Equipment 1-9
Additional Equipment Recommendations 1-9
Cruising Limitations 1-10
Operational Requirements 1-11
Hazard Information 1-12
Boat Characteristics 1-12
Night Operation 1-13
Water-skiing 1-14

RULES OF THE ROAD 1-15
Steering and Sailing Rules 1-15
Rules When Encountering Vessels 1-16
Other Special Situations 1-17
Reading Buoys and Other Markers 1-18

TO GET MORE BOATING SAFETY INFORMATION 1-20
Boating Education and Training 1-20

ENJOY YOUR BOAT RESPONSIBLY 1-20

IDENTIFICATION NUMBER RECORDS

Record your Primary I.D., H.I.N., and engine numbers in the spaces provided to assist you in ordering spare parts from your Yamaha Boat dealer. Also record and keep these I.D. numbers in a separate place in case your boat is stolen.

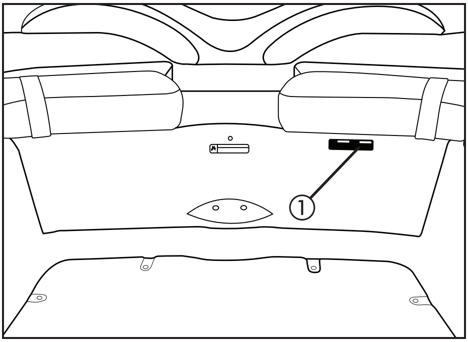

PRIMARY I.D. NUMBER

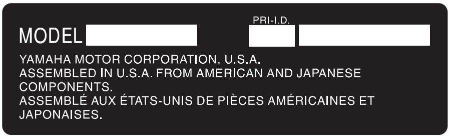

The Primary I.D. number is stamped on a label ① under the rear seat.

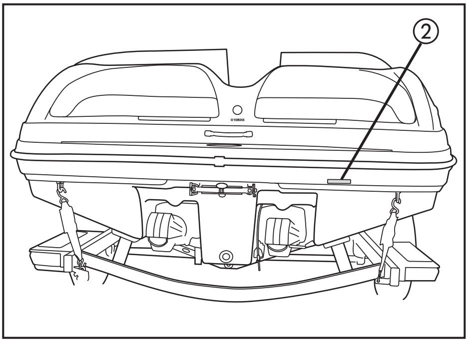

HULL IDENTIFICATION NUMBER (H.I.N.)

The H.I.N. ② is stamped into the hull on the right rear corner.

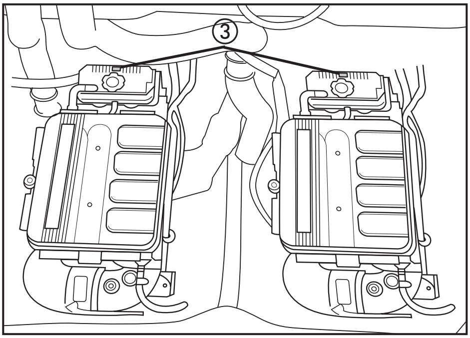

ENGINE SERIAL NUMBER

PORT

—

STARBOARD

—

The Engine Serial Numbers are stamped on a label ③ attached to the top of each engine's oil tank.

STAR LABELS

This watercraft is labeled in California with a California Air Resources Board (CARB) star label ① See below for a description of your particular label.

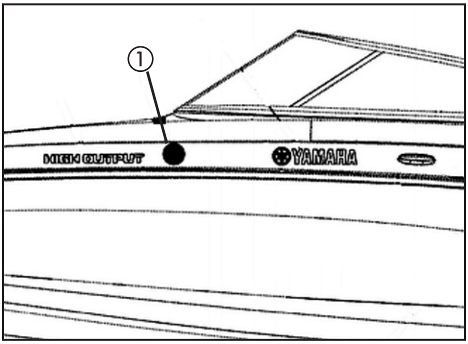

ONE STAR - LOW EMISSION
The one-star label identifies engines that meet the Air Resources Board's 2001 exhaust emission standards. Engines meeting these standards have 75% lower emissions than conventional carbureted two-stroke engines. These engines are equivalent to the U.S. EPA's 2006 standards for marine engines.

TWO STARS - VERY LOW EMISSION
The two-star label identifies engines that meet the Air Resources Board's 2004 exhaust emission standards. Engines meeting these standards have 20% lower emissions that One Star-Low-Emission engines.

THREE STARS - ULTRA LOW EMISSION
The three-star label identifies engines that meet the Air Resources Board's 2008 exhaust emission standards. Engines meeting these standards have 65% lower emissions than One Star-Low-Emission engines.

FOUR STARS -
SUPER ULTRA LOW EMISSION
The four-star label identifies engines that meet the Air Resources Board's Sterndrive and Inboard marine engine 2009 exhaust emission standards. Personal Watercraft and Outboard marine engines may also comply with these standards. Engines meeting these standards have 90% lower emissions than One Star - Low Emission engines.

EMISSION CONTROL INFORMATION

This engine family conforms to U.S. EPA regulations for marine SI engines.

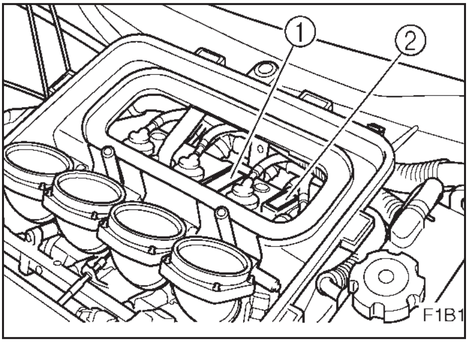

APPROVAL LABEL OF EMISSION CONTROL CERTIFICATE

This label is attached to the electrical box.

① Emission control information label

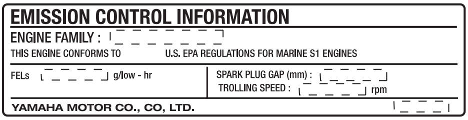

MANUFACTURED DATE LABEL

② Manufactured date label

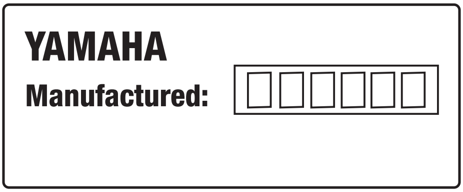

IMPORTANT LABELS

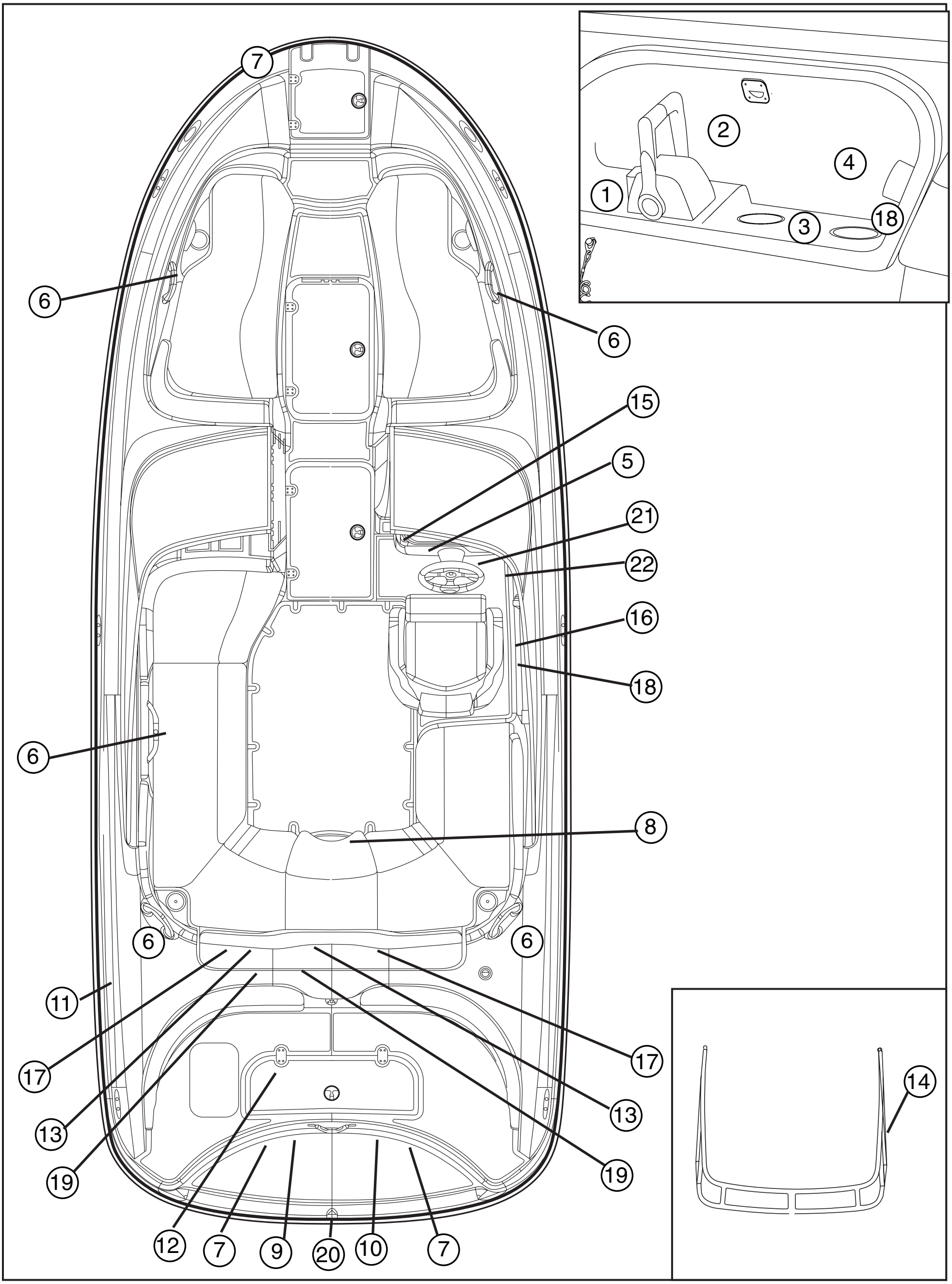

If any of these labels is damaged or missing, contact a Yamaha dealer for a replacement.

①

⚠ WARNING

To reduce the risk of SEVERE INJURY OR DEATH:

WEAR A COAST GUARD-APPROVED PERSONAL FLOTATION DEVICE (PFD).

KNOW BOATING LAWS. Yamaha recommends a minimum operator age of 16 years old. Know the operator age and training requirements for your state. A boating safety course is recommended and may be required in your state.

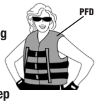

ATTACH ENGINE SHUT-OFF CORD (LANYARD) to your PFD and keep it free of controls so the engines stop if the operator leaves the helm. Failure to attach engine shut-off cord could result in a runaway boat if operator is ejected. After operation, remove engine shut-off cord and keys from boat to avoid unauthorized use by children or others.

BE SURE SHIFT CONTROL IS IN NEUTRAL before starting engines.

OPERATE WITHIN YOUR LIMITS AND AVOID AGGRESSIVE MANEUVERS to reduce the risk of loss of control, ejection, and collision. This is a high-performance boat - not a toy. Sharp turns or jumping wakes or waves can increase the risk of back/spinal injury (paralysis), facial injuries, and broken legs, ankles, and other bones. Do not jump wakes or waves.

DO NOT APPLY THROTTLE WHEN ANYONE IS AT REAR OF BOAT - turn engines off while boarding from the rear, using the swim platform, or when swimming behind the boat. Water and/or debris exiting the jet thrust nozzles can cause severe injury, including severe internal injuries if water is forced into body cavities (rectum and vagina).

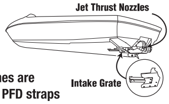

KEEP AWAY FROM INTAKE GRATES while engines are on. Items such as long hair, loose clothing, or PFD straps can become entangled in moving parts resulting in severe injury or drowning.

NEVER RIDE AFTER CONSUMING DRUGS OR ALCOHOL.

READ AND FOLLOW OWNER'S MANUAL.

YAMAHA F1C-419G-00

②

⚠ WARNING

To reduce the risk of SEVERE INJURY OR DEATH FROM COLLISIONS:
SCAN CONSTANTLY for people, objects, and other watercraft. Be alert for conditions that limit your visibility or block your vision of others.
OPERATE DEFENSIVELY at safe speed and keep a safe distance from people, objects, and other watercraft.

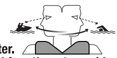

- Do not follow directly behind other watercraft.
- Do not go near others to spray or splash them with water.
- Avoid sharp turns or other maneuvers that make it hard for others to avoid you or understand where you are going.
- Avoid areas with submerged objects or shallow water.

TAKE EARLY ACTION to avoid collisions. Remember, boats do not have brakes DO NOT PULL THROTTLE LEVERS BACK TO IDLE WHEN TRYING TO STEER away from objects – you need throttle to steer. Always check throttle, shift, and steering controls for proper operation before starting boat.
Follow navigation rules and state and local laws that apply to your boat. See Owner's Manual for more information.

YAMAHA F0R-U418C-21

③

⚠ WARNING

Do not use reverse function to slow down or stop boat above trolling speed as it could cause you to lose control, be ejected, or impact boat surfaces.

Reverse is for low speed maneuvering only. Shift only while engine is idling or off.

YAMAHA F2G-U41D5-00

④

⚠ WARNING

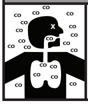

Label Carbon monoxide (CO) can cause brain damage or death.
Engine and generator exhaust contains odorless and colorless carbon monoxide gas.
Signs of carbon monoxide poisoning include nausea, headache, dizziness, drowsiness, and lack of consciousness.
Get fresh air if anyone shows signs of carbon monoxide poisoning.
See Owner's Manual for information regarding carbon monoxide poisoning.

YAMAHA F2G-U415P-00

⑤

⚠ WARNING

Gasoline vapors can explode.

Operate blower for at least 4 minutes and check engine compartment bilge for gasoline vapors before starting engines.

Do not start engines if there is a fuel leak or loose electrical connection.

YAMAHA GP1-U416F-10

⑥

⚠ WARNING

Falling Hazard.

Falling on the deck or overboard may cause injury or death.

Hold on to the grips, remain seated and place feet on the deck when the boat is in motion.

YAMAHA GP1-U418C-20

⑦

⚠ WARNING

Falling Hazard.

Falling on the deck or overboard may cause injury or death.

Do not sit here when the boat is moving.

F1C-U418C-00

⑧

⚠ WARNING

Leaking fuel is a fire and explosion hazard.
Inspect system at least annually.

YAMAHA GP1-U419D-10

⑨

⚠WARNING

Carbon monoxide (CO) can cause brain damage or death.

Engine and generator exhaust contains odorless and colorless carbon monoxide gas.

Carbon monoxide will be around the back of the boat when engines or generators are running.

Move to fresh air if you feel nausea, headache, dizziness, or drowsiness.

YAMAHA F2G-U415R-00

⑩

⚠ WARNING

Severe internal injuries can occur if water is forced into body cavities (rectum and vagina) as a result of being near jet thrust nozzles.

- Do not board from rear, use swim platform, or swim behind boat if engines are running.
- When waterskiing, wear a wet suit bottom or clothing that provides equivalent protection against forceful water entry from being near jet thrust nozzles or falling into the water. Normal swimwear does not protect against forceful water entry into body cavities (see Owner's Manual).

Do not sit on swim platform or padded engine hatch when engines are running.
You could fall overboard.

YAMAHA F0R-U416G-11

⑪

⚠ WARNING

Gasoline is highly flammable and explosive. A fire or explosion can cause severe injury or death. Shut off engine. Refuel in well ventilated area away from flames or sparks. Do not smoke. Avoid spilling gasoline. Wipe up spilled gasoline immediately.

UNLEADED REGULAR GASOLINE ONLY

YAMAHA F0D-U416B-10

⑫

NOTICE

TO AVOID LOSS OF PERFORMANCE OR BOAT DAMAGE CAUSED BY LOST ACCESS PORT CAP:

- Be sure retaining cord is securely attached to cap and strap eye.
- Press Release button firmly, then lift cap by handle. Do not lift cap with cord.
- Before reinstalling cap in access port, clean off any sand or other foreign matter on cap or port surfaces.
- Insert cap so that its projection 凸① faces the bow②, and lines up with the slot 凹③ in the access port wall.
- Press the T-handle down firmly to lock cap in place. If a strong pull will move the handle ④, it is not locked securely - the cap could be forced out by water pressure during operation.
- If water is pooled on top of cap after boat use, remove cap to let water drain, then reinstall cap as above.

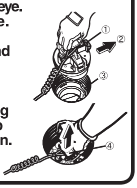

⚠ WARNING

SEVERE INJURY OR DEATH MAY RESULT IF YOU IGNORE ANY OF THE FOLLOWING.

- Turn off and remove both ignition keys, remove lanyard, and wait for all movement to stop before removing access port caps.
- Never override interlocks to run engines with hatch open.

YAMAHA F2G-U411D-00

(13)

⚠ WARNING / AVERTISSEMENT /警告

Do not touch or remove electrical parts when starting or running the engine.

Ne pas toucher ou retirer les pièces électriques lors du démarrage ou de la marche du moteur.

運転中は電装品には触らないで下さい。

YAMAHA 6B6-83623-00

(14)

⚠ WARNING

SEVERE INJURY OR DEATH CAN RESULT IF YOU IGNORE ANY OF THE FOLLOWING:
- Maximum towing capacity: 1 Person, 350 lb (158 kg) max.
- Make sure tow rope is securely fastened to the tow pylon on the tower.
- Stay clear of the tow rope while pulling a wakeboard rider or skier.
- Do not climb, hang, or sit on the wakeboard tower.

YAMAHA F1C-U415M-00

AR210 MODEL ONLY

(15)

⚠WARNING

To avoid injury, window must be secured when vessel is in motion.

Ameritex Technologies, Inc.

OTHER LABELS

(16)

MAXIMUM CAPACITIES

9 PERSONS OR 1675 LBS.

1840 POUNDS, PERSONS, GEAR

MANUFACTURER: **TENNESSEE WATERCRAFT**
MODEL: **Vonore, TN**

DESIGN COMPLIANCE WITH NMMA REQUIREMENTS BELOW IS VERIFIED.
MANUFACTURER RESPONSIBLE FOR PRODUCTION CONTROL.

NMMA CERTIFIED using ABYC standards

NATIONAL MARINE MANUFACTURERS ASSOCIATION

(17)

MODEL PRI-I.D. F1T

YAMAHA MOTOR CORPORATION, U.S.A.
ASSEMBLED IN U.S.A. FROM AMERICAN AND JAPANESE COMPONENTS.
ASSEMBLÉ AUX ÉTATS-UNIS DE PIÈCES AMÉRICAINES ET JAPONAISES.

(18)

FIRE EXTINGUISHER

- **Open canister to remove extinguisher.**

YAMAHA F1C-U419B-00

(19)

All applicable electrical system components installed as original equipment meet appropriate U.S.C.G. requirements for ignition protection. (Ref. 33 CFR 183.410 and 183.440)

YAMAHA 6B6-83623-00

(20)

NOTICE

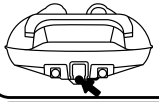

BEFORE LAUNCHING:
- **Make sure drain plug at the back of the hull is tightened securely.**
- **See Owner's Manual for draining procedure.**

AFTER OPERATION

After removing from the water:
- **Flush drive system and hull with fresh water. Open the drain plug at the back of the hull.**
- **Start the engine and rapidly move throttle lever from idle to half-throttle and back for 10~15 seconds to drain any leftover water in exhaust system.**
- **Lift rear platform hatch. If water is pooled on top of access port caps, remove caps to let water drain, then reinstall caps securely.**
- **Refer to the Owner's Manual for complete maintenance and storage information.**

YAMAHA F2G-U419C-00

(21)

NO WAKE MODE

FOR OPERATING INSTRUCTIONS CONSULT OWNERS MANUAL

(22)

⚠ WARNING

Improper use of the ballast system can overload the boat, causing poor handling and increased risk of swamping.

Ballast system adds 750 lb (340 kg) when full. Include this weight when making sure your load does not exceed the weight shown on the Maximum Capacities label.

⚠ WARNING

Drain ballast completely before trailering the boat to reduce the risk of a towing accident.

The increased weight of ballast can cause unsafe towing conditions due to negative tongue weight, including decreased tow vehicle stability and greater chance of a runaway trailer that has come off the hitch.

YAMAHA F2G-U416C-00

⚠ SAFETY INFORMATION

The safe use and operation of this boat is dependent upon the use of proper operating techniques, as well as upon the common sense, good judgment, and expertise of the operator. Every operator should know the following requirements before operating the boat.

- Before operating the boat, read the Owner's/Operator's Manual, the Operation Instruction Card, and all warning and caution labels on the boat. Also, watch the Basic Orientation Video provided with your boat. These materials should give you an understanding of the boat and its operation.
- Never allow anyone to operate this boat until they too have read the Owner's/Operator's Manual, the Operation Instruction Card, and all warning and caution labels, and if possible watched the Basic Orientation Video. Showing them the video may help reinforce the information contained in these materials.

LIMITATIONS ON WHO MAY OPERATE THE BOAT

- Yamaha recommends a minimum operator age of 16 years old.
- Adults must supervise use by minors.
- Know the operator age and training requirements for your state. A boating safety course is recommended and may be required in your state. You can find local rules by contacting the United States Coast Guard (USCG), the National Association of State Boating Law Administrators, or your local Power Squadron.
- The boat is designed to carry the operator, up to 8 passengers, and cargo. Never exceed the maximum load limit or allow more than 9 persons (or 8 persons if a water skier is being pulled) to ride in the boat at one time.

  On the 212X model, a full ballast weights 750 lb (340 kg), which must be included in the maximum load.

  Weight distribution affects performance. Keep weight in the boat low and evenly distributed from side-to-side and front to back. Remove any unnecessary cargo and store it on shore.

Maximum Load: 1675 lb (759 kg) is the maximum total weight of persons on board when the ballast (if equipped) is empty.

1840 lb. (834 kg) is the maximum total weight of persons and cargo. Include the weight of the ballast (if equipped), which is 750 lb. (340 kg) when full, when calculating weight.

REQUIRED EQUIPMENT

The U.S. Coast Guard (USCG) has regulations which describe minimum standards of safety. You must comply with these regulations, which apply to boats like your boat which are less than 26 feet long.

- Personal Flotation Devices (PFDs):
  USCG-approved PFDs worn by all people aboard, plus at least one Type IV (throwable type).
- Fire Extinguisher:
  At least one B-1 type hand-held portable fire extinguisher.
- Visual Distress Signals:
  It is recommended that a USCG-approved pyrotechnic device be stored on your boat. A mirror can also be used as an emergency signal. Contact your Yamaha dealer or the Coast Guard for more information.
- Sound Signalling Device:
  Your boat is equipped with a horn that can be used to signal other boats. See “Rules of the Road” for more information.
- Navigation Lights:
  Your boat is equipped with navigation lights for use between sunset and sunrise, and during periods of reduced visibility, such as fog. Be sure these lights are working and are turned on when necessary (see page 2-14 and 3-9 for more information).

ADDITIONAL EQUIPMENT RECOMMENDATIONS

The following equipment can help make your boating experience safer and more enjoyable:

- Mooring fenders and lines.
- Anchor with suitable line (a “Danforth” type anchor and line that is at least 6-times the depth of the water where you will drop anchor are recommended).
- Manual-type bilge pump.
- First Aid kit.
- Waterproof flashlight with extra batteries.
- Tool kit with assorted screwdrivers, pliers, wrenches (including metric sizes), and electrical tape.
- Oar or paddle (look for one with a boat hook on the other end).
- Spare parts, such as an extra set of spark plugs and fuses.
- Navigation charts for the waters where you will be boating.
- Tow rope.

CRUISING LIMITATIONS

- Scan constantly for people, objects, and other watercraft. Be alert for conditions that limit your visibility or block your vision of others.

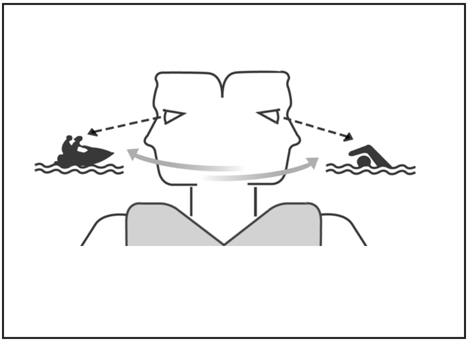

- Operate defensively at safe speeds and keep a safe distance from people, objects, and other watercraft.
- Do not follow directly behind other boats.
- Do not go near others to spray or splash them with water.
- Avoid sharp turns or other maneuvers that make it hard for others to avoid you or understand where you are going.
- Avoid areas with submerged objects or shallow water.
- Operate within your limits and avoid aggressive maneuvers to reduce the risk of loss of control, ejection, and collision.
- This is a high-performance boat – not a toy. Sharp turns or jumping waves or wakes can increase the risk of back/spinal injury (paralysis), facial injuries, and broken legs, ankles, and other bones. Do not jump waves or wakes.
- Do not operate the boat in rough water, bad weather, or when visibility is poor; this may lead to an accident causing injury or death. Be alert to the possibility of bad weather. Take note of weather forecasts and the prevailing weather conditions before setting out in your boat.
- Never operate in water that is less than 3 ft. (90 cm) deep, otherwise you increase your chance of hitting a submerged object, which could result in injury.

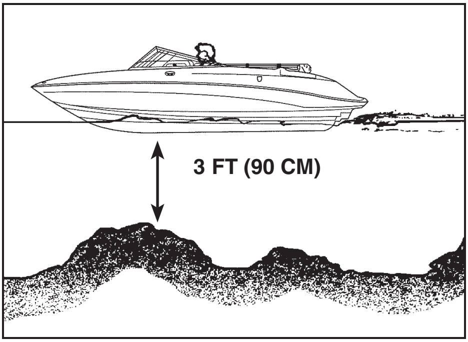

- Leave a “float plan” with a responsible person on shore. Tell where you plan to go and when you plan to arrive, and provide a description of your boat. Advise this person if your plans change and also when you arrive to prevent false alarms. A sample float plan is included on page 6-6.

OPERATIONAL REQUIREMENTS

- All riders must wear a Coast Guard approved personal flotation device (PFD).

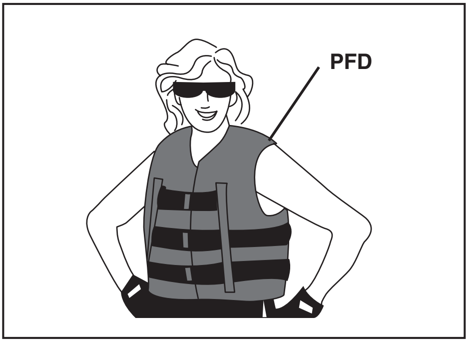

- Eye protection is recommended to keep wind, water, and glare from the sun out of your eyes while you operate your boat. Restraining straps for eyewear are made which are designed to float should your eyewear fall into the water.
- Footwear and gloves are recommended.
- NEVER operate the boat after consuming alcohol or taking drugs.
- For reasons of safety and proper care of the boat, always perform the pre-operation checks listed on page 3-4 before operating.
- Passengers must always sit in a designated seating area, place feet on the deck, and hold on to the hand grips when the boat is in motion.

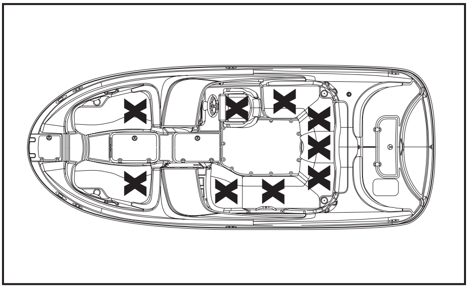

- Always consult your doctor on whether it is safe for you to ride in this boat if you are pregnant or in poor health.
- Do not attempt to modify this boat! Modifications to your boat may reduce safety and reliability, and render the boat unsafe or illegal to use.

- Attach the engine shut-off cord (lanyard) to the PFD and keep it free from the steering wheel or other controls so that the engine stops if the operator accidentally leaves the helm. Failure to attach the engine shut-off cord could result in a runaway boat if the operator is ejected.

  After operation, remove the engine shut-off cord and the keys to avoid accidental starting or unauthorized use by children or others.

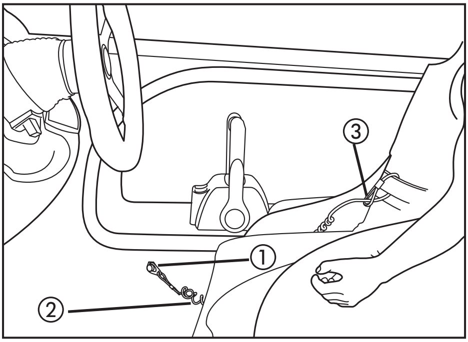

① Engine Shut-Off Switch

② Engine Shut-Off Cord with Clip

③ Cord connected to PFD

- Scan constantly for swimmers and stay away from swimming areas. Swimmers are hard to see and you could accidentally hit someone in the water.

- Avoid being hit by another boat! You should always take responsibility to watch for other traffic; other boaters may not be watching for you. If they do not see you, or you maneuver more quickly than they expect, you risk a collision.

- Maintain a safe distance from other boats or watercraft, and also watch for boats' ski ropes or fishing lines. Obey the "Rules of the Road" (see page 1-15), and be sure to check behind you before making a turn.

HAZARD INFORMATION

- Never start the engine or let it run for any length of time in an enclosed area. Exhaust fumes contain carbon monoxide, a colorless, odorless gas that may cause death within a short time. Always operate the boat in an open area.

  It is also important to have the engines off when anyone is using the extended swim step on models equipped with one because of the carbon monoxide in the exhaust gases coming from underneath the step.

BOAT CHARACTERISTICS

- Jet thrust turns the boat. Moving the throttle levers completely back to idle or the Neutral position produces only minimum thrust. If you are traveling at speeds above trolling, you will have rapidly decreasing ability to steer without throttle. You may still have some turning ability immediately after moving the throttle levers back to idle, but once the engines slow down, the boat will no longer respond to steering wheel input until you apply throttle again or you reach a trolling speed. Practice turning in

an open area without obstructions until you have a good feel for the maneuver.

- This Yamaha Boat is water-jet propelled. The pumps are directly connected to the engines. This means that the jet thrust will produce some movement whenever the engines are running. The boat has a "neutral" position, but since the boat is always producing thrust while the engines are running, some forward or reverse movement may occur.
- Do not use the reverse function to slow down or stop the boat as it could cause you to lose control, be ejected, or impact the steering wheel or other parts of the boat. This could increase the risk of serious injury. It could also damage the shift mechanism.
- Reverse can be used to slow down or stop during slow speed maneuvering, such as when docking. Once the engine is idling, shift to reverse and gradually increase engine speed. Make sure that there are no obstacles or people behind you before shifting into reverse.
- Keep away from the intake grates while the engine is on. Items such as long hair, loose clothing, or PFD straps can become entangled in moving parts, resulting in severe injury or drowning.

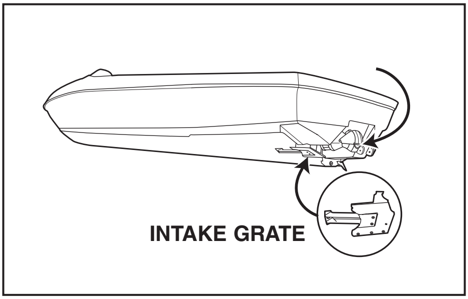

- Stop the engines and remove the clip from the engine shut-off switch before removing any debris or weeds, which may have collected around the jet intakes.
- Never insert any object into the jet thrust nozzle while the engine is running. Severe injury or death could result from coming in contact with the rotating parts of the jet pump.

NIGHT OPERATION

- When using your boat before dawn or after dusk, you must have both bow and stern lights operating. When at anchor in the dark, the stern light must be lit. See page 2-14 for instructions.

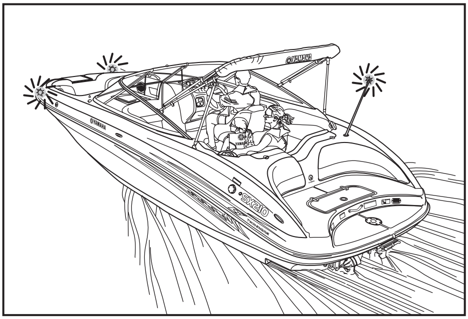

WATER-SKIING

You can use the boat to tow a water skier, using the tow cleat provided.

It is the boat operator's responsibility to be alert to the safety of the water-skier and others. Know and follow all state and local water-skiing regulations in effect for the waters in which you will be operating.

The following are some important considerations for minimizing risks while water-skiing.

- The skier should wear an approved PFD, preferably a brightly colored one so boat operators can see the skier.

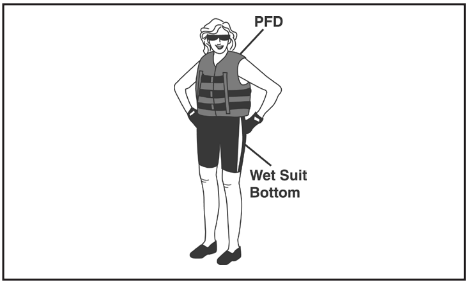

- The skier should wear protective clothing. Severe internal injuries can occur if water is forced into body cavities as a result of falling into the water or while reboarding. Normal swimwear does not adequately protect against forceful water entry into rectum or vagina. The skier should wear a wetsuit bottom or clothing that provides equivalent protection. Such clothing includes thick, tightly woven, sturdy, and snug fitting apparel such as denim, but does not include spandex or similar fabrics like those used in bicycle shorts.
- A second person should be on board as a spotter to watch the skier; in most states, it is required by law. Let the skier direct the operator's control of speed and direction with hand signals.
- When preparing to pull a skier, operate the boat at the slowest possible speed until the boat is well away from the skier and slack in the towrope is taken up. Make sure that the rope is not looped around anything.

  After checking that the skier is ready and that there is no traffic or other obstacles, apply enough throttle to raise the skier.
- Make smooth, wide turns. The boat is capable of very sharp turns, which could exceed the abilities of the skier. Keep the skier at least 50m (164 ft), about twice the distance of a standard towrope, away from any potential hazard.
- Be alert to the hazard of the towrope handle snapping back at the boat when the skier falls or is unable to get up on the skis.

For the 212X, also see page 2-22 for Wakeboard Tower use.

RULES OF THE ROAD

Your Yamaha Boat is legally considered a powerboat. Operation of the boat must be in accordance with the rules and regulations governing the waterway on which it is used.

Just as there are rules that apply when you are driving on streets and highways, there are waterway rules that apply when you are operating your boat. These rules are used internationally, and are also enforced by the United States Coast Guard and local agencies. You should be aware of these rules, and follow them whenever you encounter another vessel on the water.

Several sets of rules prevail according to geographic location, but are all basically the same as the International Rules of the Road. The rules presented here in this Owner's/Operator's Manual are condensed, and have been provided for your convenience only. Consult your local U.S. Coast Guard Auxiliary or Department of Motor Vehicles for a complete set of rules governing the waters in which you will be operating your boat.

STEERING AND SAILING RULES

Whenever two vessels on the water meet one another, one vessel has the right-of-way; it is called the "stand-on" vessel. The vessel that does not have the right-of-way is called the "give-way" or "burdened" vessel. These rules determine which vessel has the right-of-way, and what each vessel should do.

Stand-On Vessel

The vessel with the right-of-way has the duty to continue its course and speed, except to avoid an immediate collision. When you maintain your direction and speed, the other vessel will be able to determine how best to avoid you.

Give-Way Vessel

The vessel which does not have the right-of-way has the duty to take positive and timely action to stay out of the way of the stand-on vessel. Normally, you should not cross in front of the vessel with the right-of-way. You should slow down or change directions briefly and pass behind the other vessel. You should always move in such a way that the operator of the other vessel can see what you are doing.

The General Prudential Rule regarding the right-of-way is that if a collision appears unavoidable, neither boat has the right-of-way. Both boats must avoid the collision.

In other words, follow the standard rules except when a collision will occur unless both vessels try to avoid each other. If that is the case, both vessels become give-way vessels.

RULES WHEN ENCOUNTERING VESSELS

There are three main situations that you may encounter with other vessels which could lead to a collision unless the Steering Rules are followed:

Meeting: you are approaching another vessel head-on.

Crossing: you are traveling across another vessel's path.

Overtaking: you are passing or being passed by another vessel.

In the following illustration, your boat is in the center. You should give the right-of-way to any vessels shown in the white area (you are the give-way vessel). Any vessels in the shaded area must yield to you (they are the give-way vessels). Both you and the meeting vessel must alter course to avoid each other.

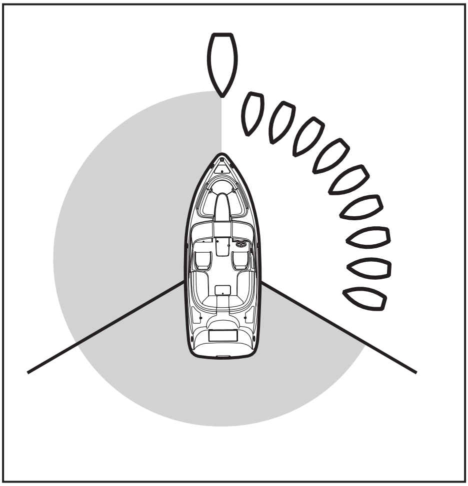

Meeting

If you are meeting another power vessel head on, and are close enough to run the risk of collision, neither of you has the right-of-way! Both of you should alter course to avoid an accident. You should keep the other vessel on your port (left) side. This rule does not apply if both of you will clear one another if you continue on your set course and speed.

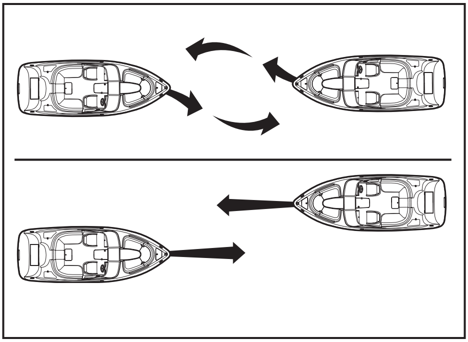

Crossing

When two power-driven vessels are crossing each other's path close enough to run the risk of collision, the vessel which has the other on the starboard (right) side must keep out of the way of the other. If the other vessel is on your starboard (right) side, you must keep out of its way; you are the give-way vessel. If the other vessel is on your port (left) side, remember that you should maintain course and direction, provided the other vessel gives you the right-of-way, as it should.

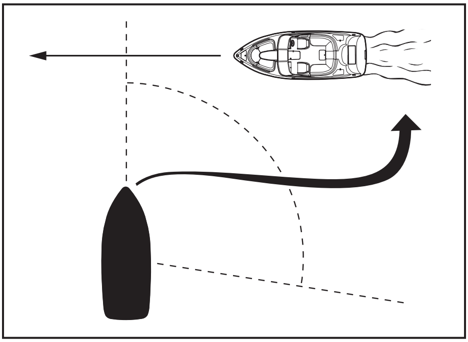

Overtaking

If you are passing another vessel, you are the give-way vessel. This means that the other vessel is expected to maintain its course and speed. You must stay out of its way until you are clear of it. Likewise, if another vessel is passing you, you should maintain your speed and direction so that the other vessel can steer itself around you.

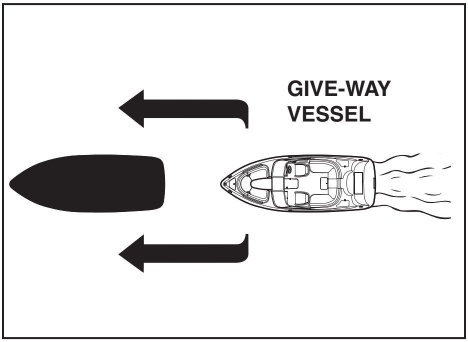

OTHER SPECIAL SITUATIONS

There are three other rules you should be aware of when operating your boat around other vessels.

Narrow Channels and Bends

When navigating in narrow channels, you should keep to the right when it is safe and practical to do so. If the operator of a power-driven vessel is preparing to go around a bend that may obstruct the view of other water vessels, the operator should sound a prolonged blast of four to six seconds on the horn. If another vessel is around the bend, it too should sound the horn. Even if no reply is heard, however, the vessel should still proceed around the bend with caution.

Fishing Vessel Right-of-Way

All vessels fishing with nets, lines or trawls are considered to be "fishing vessels" under the International Rules. Vessels with trolling lines are not considered fishing vessels. Fishing vessels have the right-of-way regardless of position. Fishing vessels cannot, however, impede the passage of other vessels in narrow channels.

Sailing Vessel Right-of-Way

Sailing vessels should normally be given the right-of-way. The exceptions to this are:

1. When the sailing vessel is overtaking the power-driven vessel, the power-driven vessel has the right-of-way.
2. Sailing vessels should keep clear of any fishing vessel.
3. In a narrow channel, a sailing vessel should not hamper the safe passage of a power-driven vessel that can navigate only in such a channel.

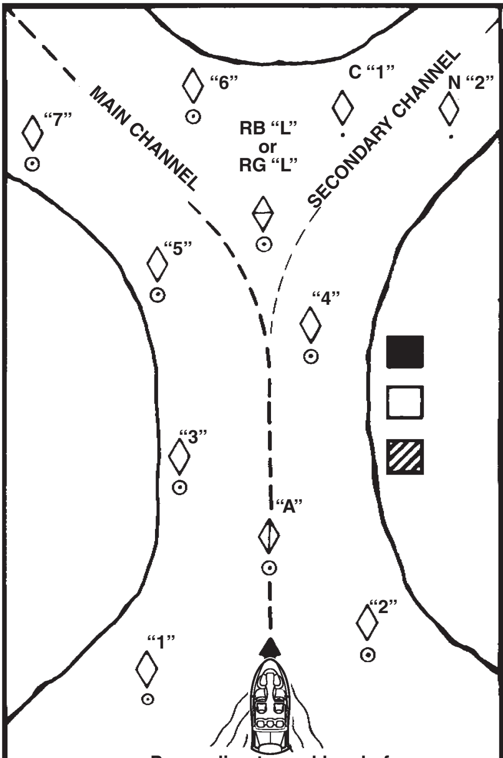

Proceeding toward head of navigation from seaward

SECONDARY CHANNEL BUOYS
STARTS NEW NUMBERING SYSTEM

C "1"

CAN BUOY
Odd number. Leave to port.

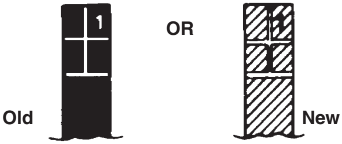

N "2"

NUN BUOY
Even number. Leave to starboard.

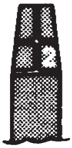

No change

"1" "3" "5" "7"
LIGHTED BUOY (Port Hand)
Odd number, increasing toward head of navigation. Leave to port (left) proceeding

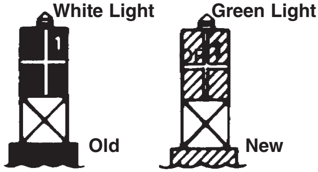

"2" "4" "6"
LIGHTED BUOY (Starboard Hand)
Even number, increasing toward head of navigation. Leave to starboard (right) proceeding up-stream

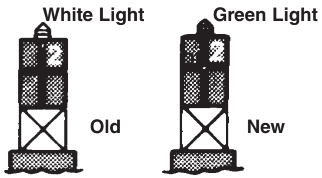

"A"
LIGHTED SAFE WATER BUOY
No number. Marks midchannel, pass on either side. Letter has no lateral significance, used for identification and location purposes.

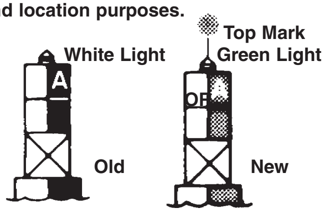

RB "L" RB "L"
LIGHTED PREFERRED CHANNEL TO PORT BUOY
No number. Topmost band red - preferred channel is to left of buoy. Letter has no lateral significance, used for identification and location purposes.

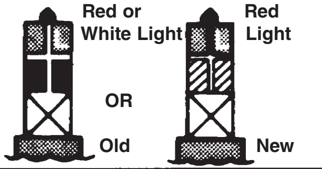

Reading Buoys and Other Markers

The waters of the United States are marked for safe navigation by the lateral system of buoyage. Simply put, buoys and markers have an arrangement of shapes, colors, numbers, and lights to show which side of the buoy a boater should pass on when navigating in a particular direction. The markings on these buoys are oriented from the perspective of being entered from seaward (the boater is going towards the harbor). Red buoys are passed on your starboard (right) side when proceeding from open water into port, and black buoys are to your port (left) side. An easy way to remember the meaning of the colors is the phrase “red right returning.” When navigating out of the harbor, your position with respect to the buoys should be reversed; red buoys should be to port and black buoys to starboard.

Many bodies of water used by boaters are entirely within the boundaries of a particular state. The Uniform State Waterway Marking System has been devised for these waters.

This system uses buoys and signs with distinctive shapes and colors to show regulatory or advisory information. These markers are white with black letters and orange borders. They signify speed zones, restricted areas, danger areas, and general information.

Remember, markings may vary by geographic location. Always consult local boating authorities before riding your boat in unfamiliar waters.

TO GET MORE BOATING SAFETY INFORMATION

Be informed about boating safety. Additional publications and information can be obtained from many organizations, including the following.

United States Coast Guard
Consumer Affairs Staff (G-BC)
Office of Boating, Public, and Consumer Affairs
US Coast Guard Headquarters
Washington, D.C. 20593-0001

Boating Safety Hotline:
1-800-368-5647

Other Sources:
You can find local rules by contacting the National Association of State Boating Law Administrators, or your local Power Squadron.

BOAT EDUCATION AND TRAINING

The Online Boating Safety Course, available through the watercraft section of the yamaha-motor.com website, is a free, 50-question learning course available to the public. Upon successful completion of 80 percent or better, the user can request a certificate of completion by mail or can download one immediately. The Online Boating Safety Course, provided by the Boat/US Foundation, is approved by the National Association of State Boating Law Administrators (NASBLA) and recognized by the United States Coast Guard. This course meets the education requirement for those states that recognize non-proctored, NASBLA-approved courses.

The Online Boating Safety Course:
http://www.boatus.com/onlinecourse/

ENJOY YOUR BOAT RESPONSIBLY

You share the areas you enjoy when operating your boat with others and with nature. So your enjoyment includes a responsibility to treat these other people, and the lands, waters, and wildlife with respect and courtesy.

Whenever and wherever you are boating, think of yourself as the guest of those around you. Remember, for example, that the sound of your boat may be music to you, but it could be just noise to others. And the exciting splash of your wake can make waves others won't enjoy. Avoid riding close to shoreline homes and waterfowl nesting areas or other wildlife areas, and keep a respectful distance from fishermen, other boats, swimmers, and populated beaches. When travel in areas like these is unavoidable, operate slowly and obey all laws.

Remember that pollution can be harmful to the environment. Do not refuel or add oil where a spill could cause damage to nature. And keep your surroundings pleasant for the people and wildlife that share the waterways: don't litter!

When you go boating responsibly, with respect and courtesy for others, you help ensure that our waterways stay open for the enjoyment of a variety of recreational opportunities.

Chapter 2

FEATURES & FUNCTIONS

LOCATION OF MAIN COMPONENTS 2-1

OPERATION OF CONTROLS AND OTHER FUNCTIONS 2-5
Steering 2-5
Tilt Lever 2-5
Engine Shut-Off Switch 2-6
Main Switches 2-6
Throttle/Shift Levers 2-7
Fuel Tank Filler Cap 2-9
Gauges 2-9
Overheat Warning System 2-13
Switches 2-14
Ballast System 2-16
Swivel Seat Operation 2-17
Stereo System 2-18
Engine Hood 2-18
Storage Compartments 2-18
Front Walk-Through 2-20
Rear Walk-Through 2-21
Swim Platform 2-21
Wakeboard Tower 2-22
Collapsing the Wakeboard Tower 2-22

LOCATION OF MAIN COMPONENTS

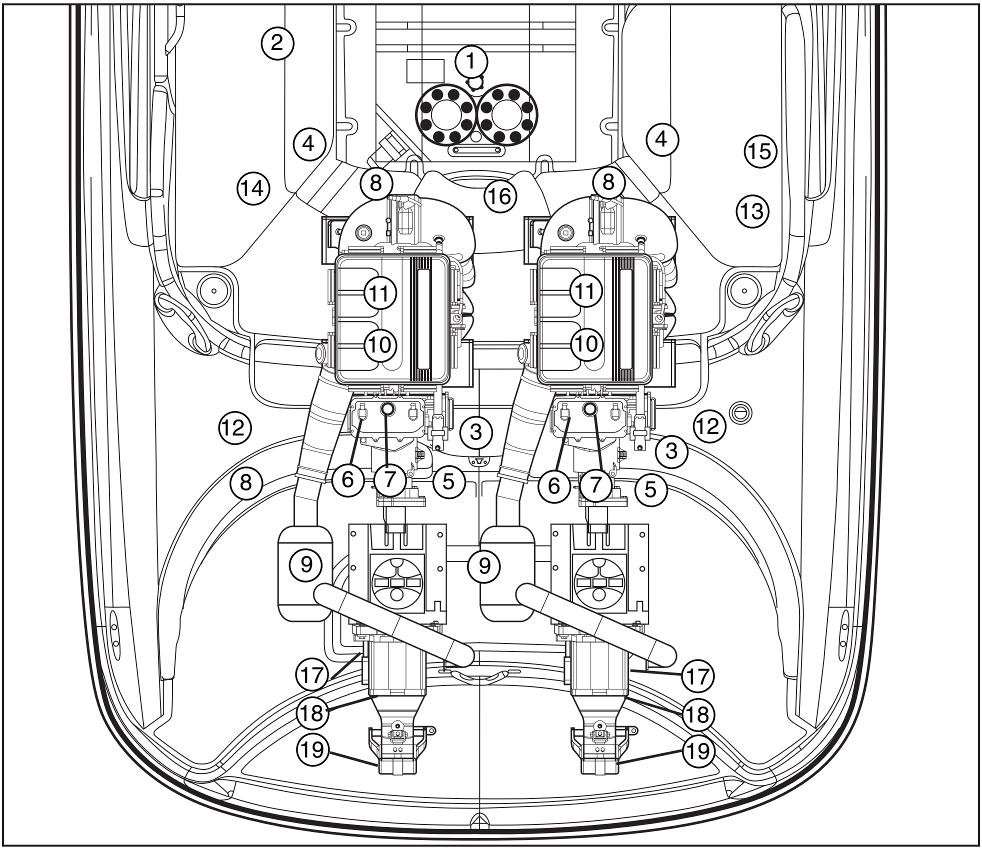

Main Features:

1. Fuel Tank
2. Battery
3. Blower Motor

Port/Starboard Features:

4. Flush Attachments
5. Electrical Boxes
6. Oil Tanks
7. Oil Tank Cap/ Dipstick
8. Mufflers
9. Muffler Boxes
10. Spark Plugs/ Spark Plug Caps
11. Air Filter Cases
12. Hood Supports
13. Engine Compartment Vent Outlets
14. Engine Compartment Vent Inlets
15. Fuel Tank Compartment Air Ventilation
16. Fuel Tank Compartment Drain Plug
17. Jet Pumps
18. Jet Thrust Nozzles
19. Reverse Gate

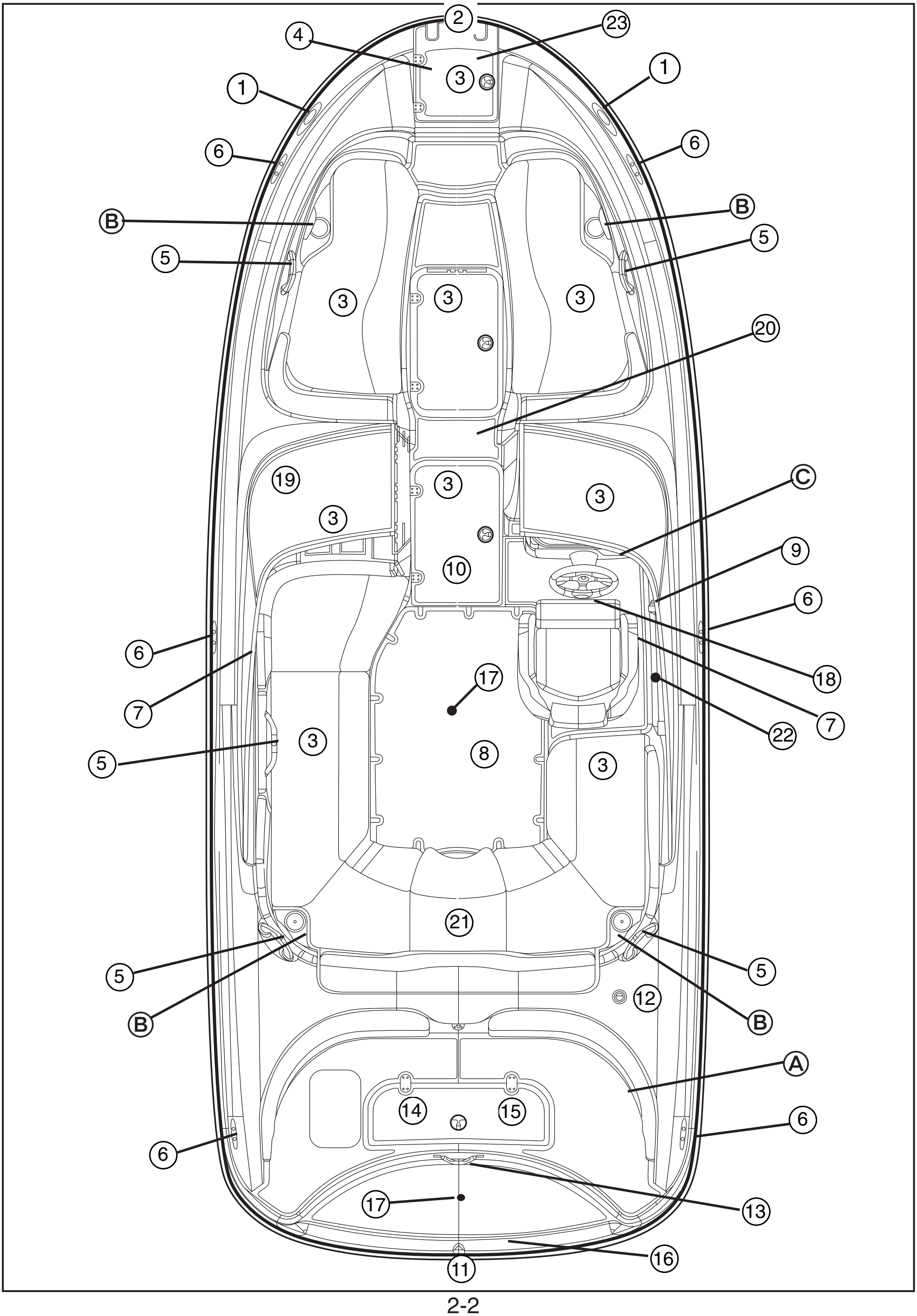
1
2
3
4
5
6
7
8
9
10
11
12
13
14
15
16
17
18
19
20
21
22
23
A
B
C

LOCATION OF MAIN COMPONENTS:

① Bow Lights
② Bow Eye
③ Storage Compartments
④ Bow Anchor Locker
⑤ Grab Handles
⑥ Cleats
⑦ Courtesy Lights
⑧ Fuel Tank Inspection Access Hatch
⑨ Throttle/Shift Levers
⑩ Cooler
⑪ Stern Ladder
⑫ Stern Light Socket
⑬ Ski Tow Hook
⑭ Jet Pump Clean-out Access Panel
⑮ Pump Clean-out Interlock Switches
⑯ Rear Boarding Step
⑰ Accessory Pedestal Table Mounts
⑱ Tilt Adjustable Steering Wheel
⑲ Glove Box
⑳ Center Walk-Through
㉑ Walk-Through Transom
㉒ Fire Extinguisher Holder
㉓ Bow Ladder

Wakeboard Tower (212X only, not shown)

LOCATION OF STEREO COMPONENTS:

Ⓐ Remote Control Keypad
Ⓑ Speakers
Ⓒ CD Player/Receiver

LOCATION OF MAIN COMPONENTS

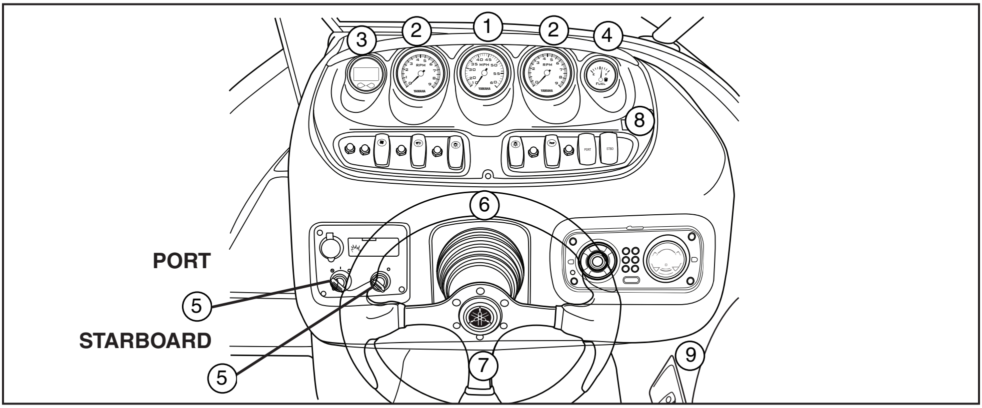

Control Features:

① Speedometer

② Tachometer

③ Depth Finder

④ Fuel Gauge

⑤ Ignition Switch Keys

⑥ Steering Wheel

⑦ Tilt Adjustment Lever

⑧ Switches and Breakers

⑨ Ballast System Switch (212X only)

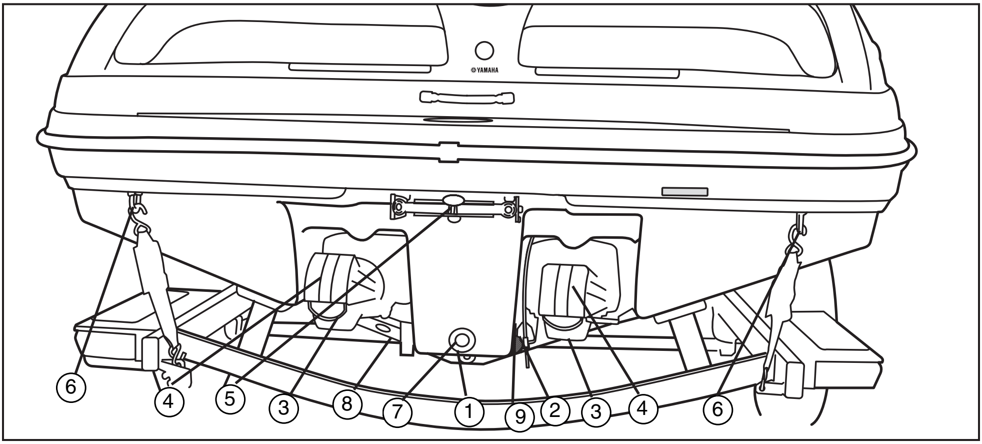

Control Features:

① Hull Drain

② Speedometer Pick-up

③ Steering Nozzle

④ Reverse Gates

⑤ Ladder

⑥ Trailer Strap Eyes

⑦ Deck Drain

⑧ Depth Finder Transponder

⑨ Ballast System Fill/Drain (212X only)

OPERATION OF CONTROLS AND OTHER FUNCTIONS

STEERING

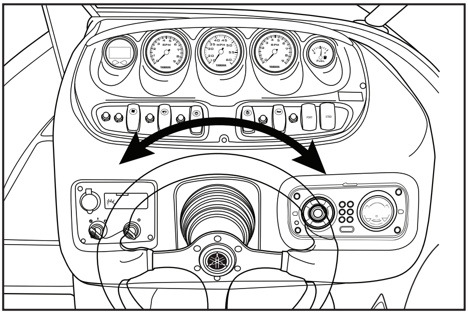

① Steering wheel

Your boat can be steered by turning the steering wheel the same direction you wish to travel, to the right or left. When the wheel is turned, the angle of the jet (output) nozzles at the rear of the craft is changed, and the change in direction of the nozzles changes the direction of the boat accordingly. Since the strength of the jet thrust determines the speed and direction of a turn, the throttle must always be opened above idle when attempting a turn, except at trolling speed.

Because boats steer from the stern (rear), the stern of the boat swings out in the opposite direction of your turn. If you turn to the starboard (right), for example, the stern of the boat will swing to the left. Keep this in mind when navigating near a person in the water, such as a down skier, or an obstacle, such as a dock.

TILT LEVER

⚠WARNING

- **Never touch the tilt lever during operation, otherwise the steering wheel could suddenly change position, which may lead to an accident.**
- **Be sure the steering wheel is locked in position after adjustment. If the steering wheel is not locked in position, it may suddenly change position during operation, which may lead to an accident.**

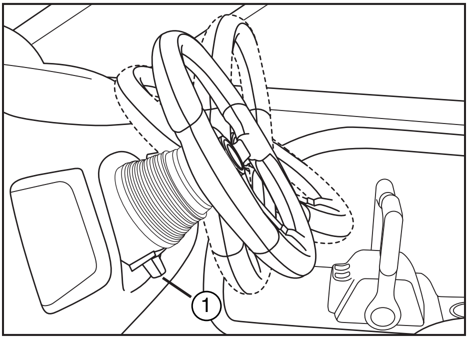

The tilt lever ① is located under the steering wheel and is used to adjust the tilt of the steering wheel. There are three positions.

To adjust the tilt, pull the lever up, and then move the steering wheel up or down to the desired position. The lever will lock into place when the wheel is moved into one of the three available positions.

ENGINE SHUT-OFF SWITCH

⚠WARNING

- **Always attach the engine shut-off cord to your personal flotation device (PFD) or arm or leg, BEFORE starting the engines. Failure to attach the cord could result in a runaway boat if the operator is ejected.**
- **Do not attach the cord to clothing that could tear loose. Do not route the cord in such a way that it could become entangled, preventing it from functioning.**
- **Avoid accidentally pulling the cord during normal operation. Once the engines have stopped you have no steering control of the boat which could result in an accident. Also, without engine power, the boat could slow rapidly from planing speed. This could cause people and objects in the boat to be thrown forward, which could cause injury.**

The clip on the end of the engine shut-off cord must be attached to the engine shut-off switch for the engines to run. The cord must be attached to a secure place on the operator's personal flotation device (PFD) or arm or leg. Should the operator fall overboard or leave the helm, the cord will pull out the clip, stopping ignition to both engines. This will prevent the boat from running away under power.

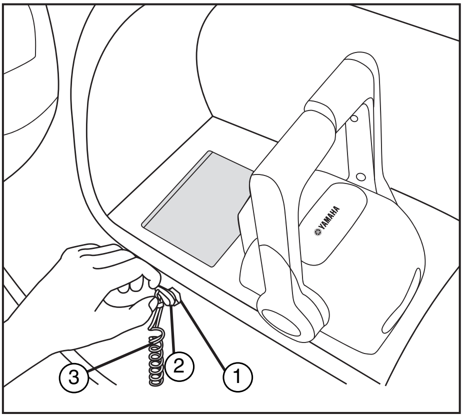

① Engine shut-off switch

② Engine shut-off cord with clip

③ Engine shut-off cord (lanyard)

MAIN SWITCHES

There is a main switch for each engine. The main switches control the ignition and electrical circuits as follows:

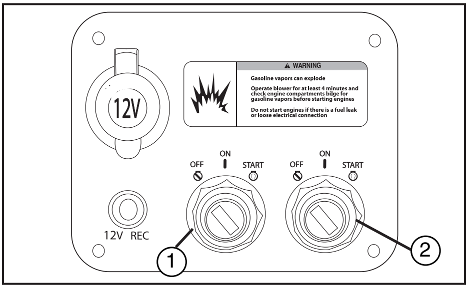

① Port (left) engine
② Starboard (right) engine

OFF:
Ignition circuits are switched off. The engine cannot be started but other switches will operate. (The key can be removed.)

ON:
Ignition circuits are switched on (The key cannot be removed).

START:
The starter motor will turn to start the engine. (When the key is released, it returns automatically to "ON.")

TIP:
The engine will not start when the engine shut-off cord clip is removed from the engine stop switch. The starter motor will turn over without the cord attached.

THROTTLE/SHIFT LEVERS

⚠WARNING

- **Before shifting, make sure there are no swimmers or obstacles in the water near you.**
- **When operating in Reverse, go slowly. Do not open the throttle more than half. Otherwise, the boat may become unstable, which could result in loss of control and an accident.**
- **Do not shift into Reverse while traveling at planing speeds. Loss of control, boat swamping, or damage to the boat could occur.**

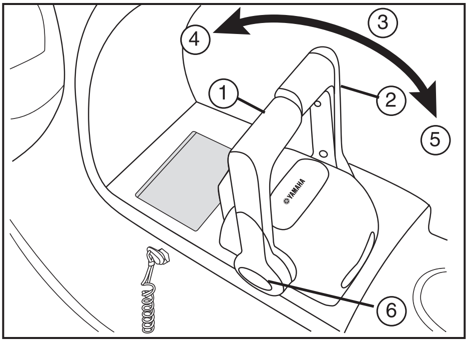

① Throttle/ Shift Lever, port (left) side engine
② Throttle/ Shift Lever, starboard (right) side engine
③ Neutral
④ Forward
⑤ Reverse
⑥ Free Accelerator Button

A separate lever for each engine controls both throttle and shifting. In normal operation, the levers are moved together. Moving the levers forward from Neutral shifts into the Forward position and then, as the lever is moved farther, accelerates the engines for more thrust. Moving the levers back from Neutral shifts into the Reverse position and then, as the lever is moved farther, accelerates the engines for more thrust. The lever must be moved about 35° from Neutral before Forward or Reverse engages and the engine starts to accelerate.

This boat is equipped with “start-in-gear” protection. The engines will not start unless the levers are in the Neutral position.

The shift lever controls the direction of travel.

The drive line on the boat is direct drive, so jet thrust is always being produced while the engines are running. The direction of the boat is controlled by jet pump gates which direct the flow of the jet thrust as follows:

Forward
The jet pump gates are lifted all the way up. All jet thrust is to the rear, which moves the boat forward.

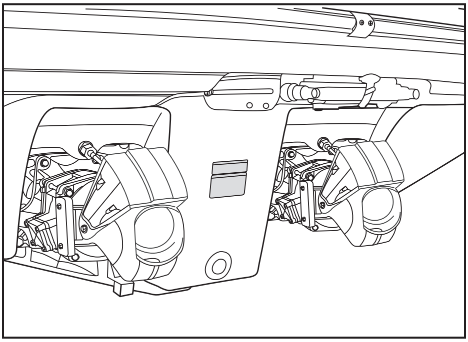

Neutral
The jet pump gates are dropped down part way over the jet nozzles. Some jet thrust is to the rear and some jet thrust is redirected forward. This balance of thrust acts like “neutral” to keep the boat from moving. **WARNING! Leave the throttles in the idle position when Neutral is selected. The boat will start moving as if it was in Forward or Reverse if engine speed is increased above idle in Neutral.**

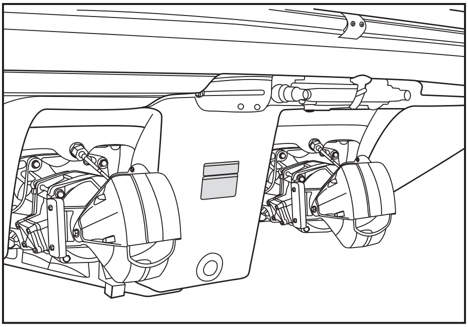

Reverse
The jet pump gates are dropped all the way down over the jet nozzles. Jet thrust is redirected toward the bow of the boat, which moves the boat backward.

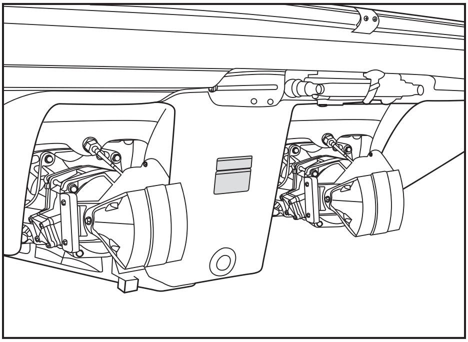

Free Accelerator
This control is equipped with a “Free Accelerator” button which will allow engines to be accelerated with the jet pump gates in the Neutral position. **WARNING! The boat will start moving as if it were in Forward or Reverse if engine speed is increased above idle in Neutral. Use the Free Accelerator only if necessary and be prepared for the possibility of boat movement.**

FUEL TANK FILLER CAP

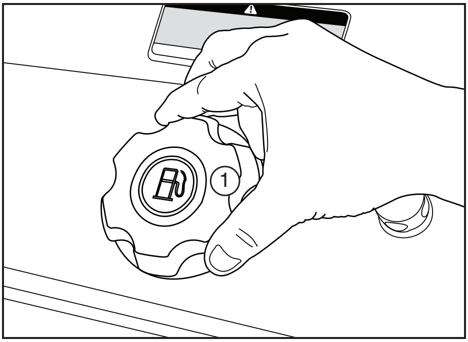

Be sure to tighten the cap securely before operating.

GAUGES

1. **Speedometer**
   The speedometer ① shows the boat speed in miles per hour (mph).

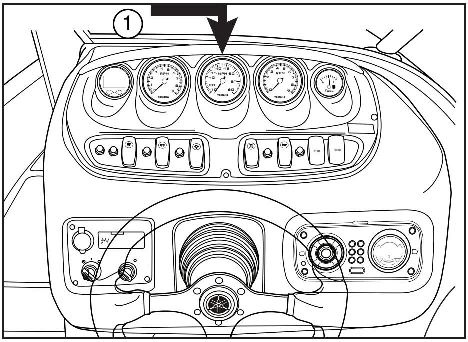

2. **Tachometers**
   The boat has two tachometers ② which display engine rpm. The one on the left is for the port engine. The one on the right is for the starboard engine. For cruising, adjust the throttle levers so both engines are running at the same rpm.

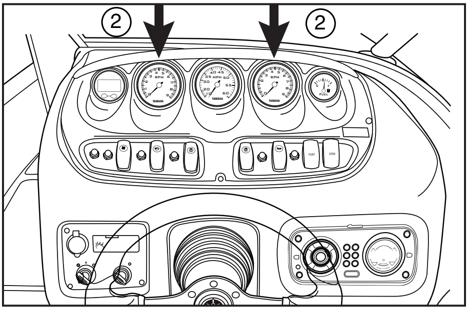

NOTE: Because of the mechanical throttle linkage, the throttle levers may not be exactly even with one another when the engines are running at the same rpm.

3. **Fuel Level Gauge**
   The fuel level gauge ① shows the amount of fuel in the fuel tank. The ignition switch must be in the "ON" position to activate the gauge.

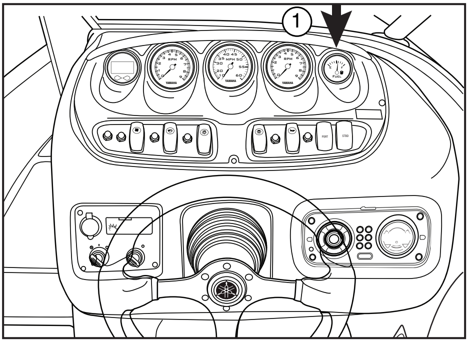

Always consider the distance you are traveling and the amount of fuel you have available. Be sure you have enough fuel to reach your next fuel stop. A good tip to remember is to use a third of your fuel to get out, a third to get back, and keep a third in reserve.

4. **Depth Finder**

⚠WARNING

- **The depth finder should not be used as a navigational aid to prevent grounding, boat damage, or personal injury. Always operate the boat at slow speeds in unfamiliar water, or if you suspect shallow water or submerged objects, as water depth may change too quickly to allow time for you to react.**
- **Extremely dirty water, very soft bottom, high speeds, deep water, or a combination of the above may result in incomplete or inaccurate readings.**

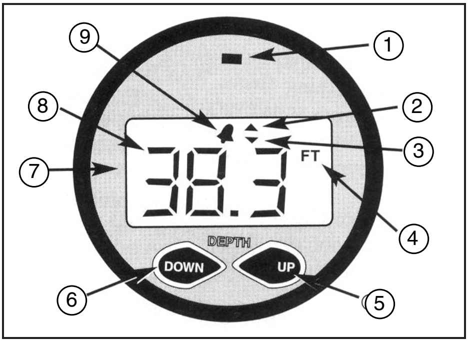

① Warning LED
② Shallow Alarm Indicator
③ Deep Alarm Indicator
④ Units of Measure
⑤ Up Key
⑥ Down Key
⑦ Display
⑧ Depth Readout
⑨ Alarm Indicator

The Depth Finder continually monitors and displays a reading of water depths from 2.5 to 200 feet (0.8 to 61 meters). The instrument calculates the depth by emitting sound signals and measuring how long it takes for the sound to "echo" off the bottom. In addition, the gauge can be set for each use to give an alarm when a specified shallow-water or deep-water depth is reached.

Setting the Measurement Unit
The depth readout and alarm functions can be set to Feet (FT) or Meters (M). The default unit is Feet. If Meter depth readings are preferred, this must be set for each use.

1) Press the "UP" and "DOWN" keys at the same time.

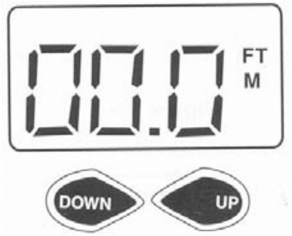

2) To set the units to feet press the "UP" key. "FT" will flash on the display.
3) To set the units to meters press the "DOWN" key. "M" will flash on the display.
4) The display automatically returns to the normal mode after 5 seconds.

TIP: Extremely dirty water, very soft bottom, high speeds, deep water, or a combination of the above may result in incomplete or inaccurate readings. Under these conditions variable readings or "- - -" will be displayed.

Setting the Shallow Alarm
Set the Shallow Alarm function each time you wish to use it. The gauge does not retain the setting after the main switch is turned off.

The Shallow Alarm function can be set for depths ranging from 3 to 199 feet (1 to 60.3 meters). When the depth is less than the chosen setting, the alarm is triggered. The alarm sounds an audible "alarm" for 10 seconds while flashing the Warning LED, as well as the Alarm indicator and Shallow Alarm indicator on the display.

After 10 seconds the audible alarm mutes, but the Warning LED and the indicators continue to blink until the depth increases, or the alarm is reset.

1) Press the "UP" key located on the front of the display. The current alarm setting will be displayed on the display. "000" is the default setting (no alarm function).

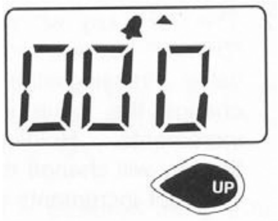

2) Press the "UP" key again within 5 seconds to increase the selected value (more water depth before alarm). Press the "DOWN" key to

reduce the value. Press and release either key to change the value in 1-foot increments. Press and hold the key to change the value in 9-foot increments per second.

3) After your selection is made, the display will return to normal operation after 5 seconds.
4) The Alarm indicator and Shallow Alarm indicator will now be present.

Setting the Deep Alarm

Set the Deep Alarm function each time you wish to use it. The gauge does not retain the setting after the main switch is turned off.

The Deep Alarm function can be set for depths ranging from 3 to 199 feet (1 to 60.3 meters). When the depth is more than the chosen setting, the alarm is triggered. The alarm sounds an audible “alarm” for 10 seconds while flashing the Warning LED, as well as the Alarm indicator and the Deep Alarm Indicator on the display.

After 10 seconds the audible alarm mutes and the Warning LED and the indicators continue to blink until the depth decreases, or the alarm is reset.

1) Press the “DOWN” key located on the front of the display. The current alarm setting will be displayed on the display. “000” is the default setting (no alarm function).

2) Press the “UP” key within 5 seconds to increase the selected value (more water depth). Press the “DOWN” key to reduce the value. Press and release either key to change the value in 1-foot increments. Press and hold the key to change the value in 9-foot increments per second.
3) After your selection is made, the unit will return to normal operation after 5 seconds.
4) The Alarm indicator and Deep Alarm indicator will now be present.

5. Warning Indicators

There are three warning indicators in each tachometer to alert you about certain conditions on your boat. These warnings correspond to the engine monitored by the tachometer.

Check Engine – If a sensor malfunction or a short circuit is detected, the warning indicator will come on. If this occurs, reduce engine speed and return to shore. Have a Yamaha dealer check the engine and circuits.

Engine Overheat – This model is equipped with an engine overheat warning system. See the following section for an explanation.

Oil Pressure – If oil pressure does not rise to specification, the oil pressure warning indicator comes on. At the same time, engine speed reduction control is activated, limiting maximum speed to 3000 rpm. If this occurs, reduce engine speed and return to shore. Have a Yamaha dealer check the engine oil pressure.

TIP: All three warning indicators blink when the No-Wake Mode system is engaged (see page 2-14).

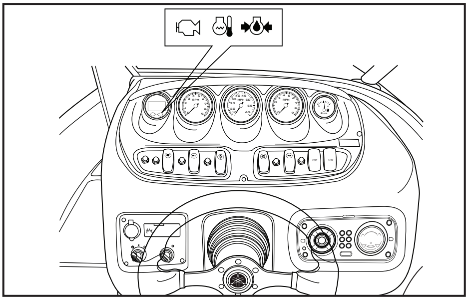

OVERHEAT WARNING SYSTEM

The engine has an overheat warning device. If either engine starts to overheat, the engine speed of the affected engine will be limited to 3000 rpm.

Each engine is equipped with cooling-water pilot outlets ① on the starboard side of the hull. Check that water comes out of the outlet while the engine is running, particularly while applying throttle. If you do not see any water at the outlet, cooling water may not be circulating in the engine.

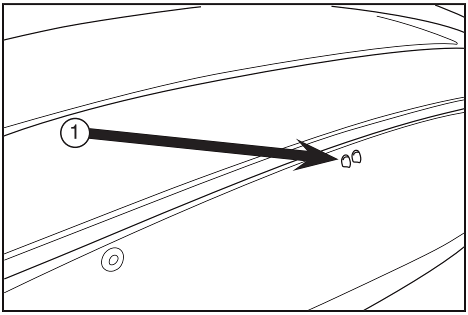

TIP: If water cooling passages on the engines are dry, it will take about 20 seconds for water to reach the pilot outlets after starting.

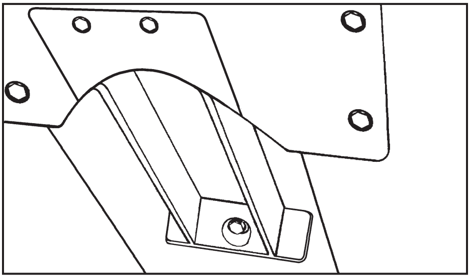

If water is not circulating, something may be clogging the jet intake grate. Refer to the Jet Pump Clean-Out procedures on page 5-5 for further information.

NOTICE:

If the cause of overheating cannot be found and corrected, take special precautions to avoid major engine damage while you return to shore.

SINGLE ENGINE OVERHEATING — Shut off the overheating engine and use the properly running engine to return to shore. Operate at "no-wake" speed to prevent water from flooding the non-operating engine through the cooling water intake. See page 2-14 for "No Wake Mode" system operation.

BOTH ENGINES OVERHEATING — If getting a tow from another vessel is not possible, operate both engines just slightly above idle while you return to shore. If you can be towed, refer to "Towing the boat" on page 5-3.

SWITCHES

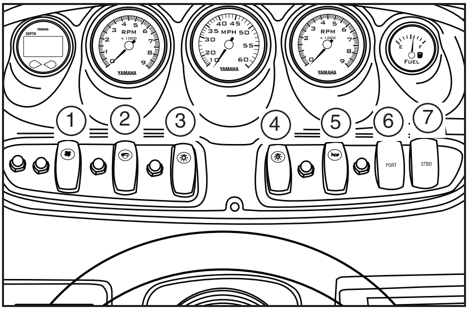

① Blower
② Bilge Pump
③ Courtesy Lights
④ Lights
⑤ Horn
⑥ No-Wake Mode (Port)
⑦ No-Wake Mode (Starboard)

Blower

Press this switch to turn on the blower to ventilate the engine compartment. See page 3-9 for more information.

Bilge Pump

Press this switch to activate the bilge pump. See page 3-8.

Courtesy Lights

This switch turns on the lights ⑧ located in the recess on each side of the gunwale.

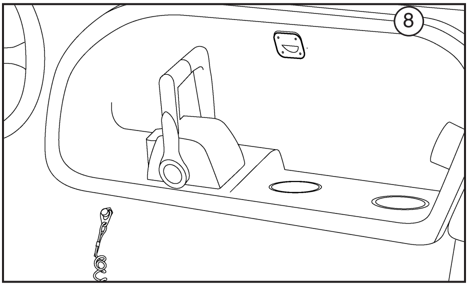

Lights

This toggle switch controls the required on-board lighting. Press the top of the switch to turn on both the bow light and stern light for night running. Press the bottom of the switch to operate the stern light alone when anchored at night. Put the switch in the middle position to turn off all lights (see page 3-9).

Horn

Pressing this switch activates the horn. The horn can be used to signal other boats as required by the "Rules of the Road" (see page 1-15).

No Wake Mode

The No-Wake Mode System is useful for operating the boat at a steady speed with a minimal wake. This is especially convenient when traveling in harbors, channels, or other areas posted with low speed limits as "no-wake zones."

No-Wake Mode can be engaged when the throttles are at idle speed in Forward, Neutral, or Reverse. Engine speed will be set at 2400 rpm for convenient, no-wake maneuvering.

To set No-Wake Mode:
Press both gray No-Wake Mode buttons simultaneously until the three symbols in each tachometer start blinking.

TIP: Although each engine is controlled separately, always put both engines in No-Wake Mode for proper operation.

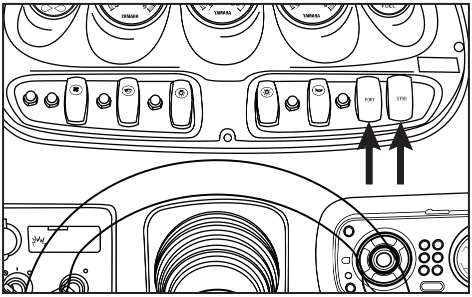

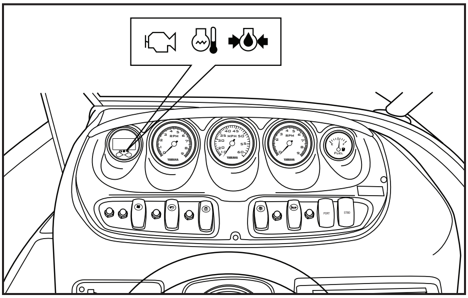

To cancel the No-Wake Mode, do any of the following:

- Press both No-Wake Mode buttons again.
- Move the accelerator levers to a faster engine speed.
- Shut off the engines with the key or by using the engine stop switch lanyard. **WARNING! Once the engines have stopped, you have NO STEERING CONTROL over the boat. You could collide with another boat, a dock, or other obstacle.**

Accessory Outlet
There is a 12VDC outlet with resettable circuit breaker located on the main switch panel. ***NOTICE:*** **Do not use an automotive cigarette lighter or other accessories with a plug that gets hot because the outlet can be damaged.**

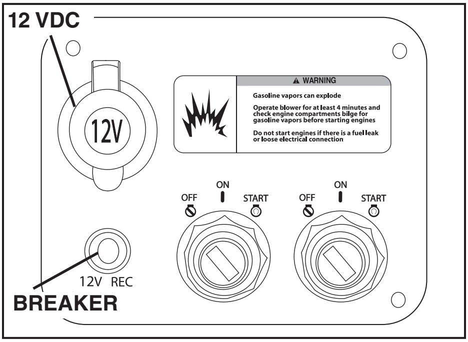

Switch Circuit Breakers
The electrical circuit for each switch is protected by a circuit breaker. If the button below a switch pops out, push it back in with your finger. If it pops out again, ask your Yamaha dealer to inspect the electrical system.

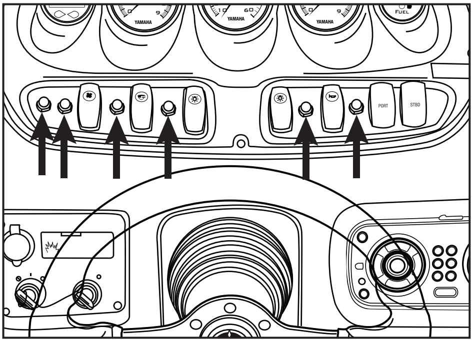

TIP: There is also an accessory fuse at the battery (see page 4-16).

BALLAST SYSTEM (212X Only)

⚠WARNING

- **Improper use of the ballast system can overload the boat, causing poor handling and increased risk of swamping.**
- **Ballast system adds 750 lb (340 kg) when full. Include this weight when making sure your load does not exceed the weight shown on the Maximum Capacities label.**
- **Drain ballast completely before trailering the boat to reduce the risk of a towing accident. The increased weight of ballast can cause unsafe towing conditions due to negative tongue weight, including decreased tow vehicle stability and greater chance of a runaway trailer that has come off the hitch.**

Your boat is equipped with an adjustable ballast system to increase the amount of wake the boat leaves behind it. The more water that is pumped into the ballast sacks, the bigger the boat's wake.

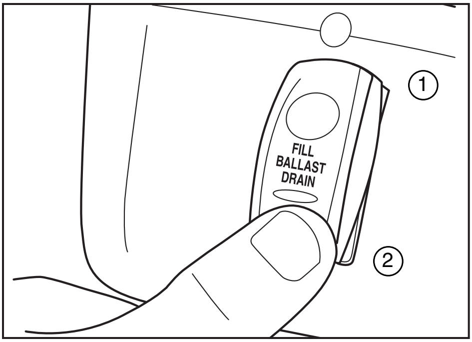

① Fill Ballast
② Drain Ballast

Filling

The ballast fills and discharges water from a screened fitting located below the waterline in the starboard jet pump tunnel. The pump can be operated when the boat is moored or running slowly at a no-wake speed.

NOTICE:

Be sure there is no cargo in the rear storage compartments that can be damaged by the water bladders as they fill.

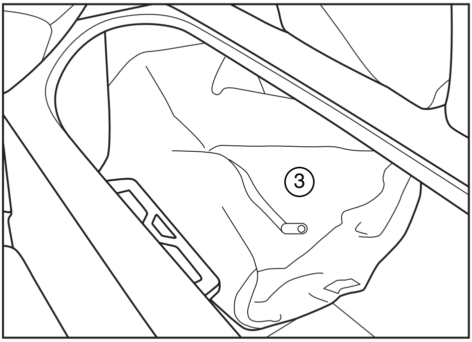

③ Ballast Bladder in Rear Storage Compartment

1) Press the top of the switch ("FILL") to begin automatic filling. The pump will run for about 8-1/2 minutes to take on about 630 lb of water.
2) To manually stop the pump, briefly press the bottom of the switch ("DRAIN"). If more water is desired, press the top of the switch again. The pump will run for the remainder of the 8-1/2 minutes unless stopped again.
3) If more weight is desired after automatic filling, press the top of the switch again. The pump will run for 10 seconds to add about 12-1/2 pounds. Press the switch nine times after the auto filling for maximum ballast.

NOTICE:

Do not overfill. The boat can be seriously damaged. If filling ballast completely, remove the rear seat cushions. Watch the bladders to be sure they do not put pressure on the deck above them.

4) To reduce ballast weight, press the bottom of the switch. When the desired weight is achieved, briefly press the top of the switch.

If the ballast does not fill properly, check the screened intake for clogging. See page 2-4 for location.

Draining

1) Press the bottom of the switch ("DRAIN") to drain the ballast. The pump will run for about 10-1/2 minutes to drain full ballast bladders. The draining can be done at any boat speed; ballast drains more efficiently when the boat is underway. Drain fully before loading the boat on the trailer.
2) When the boat is on the trailer still at a stern-down angle on the loading ramp, operate the pump again to drain any remaining water. It may be necessary to press or lift the bladders to help drain them completely.

SWIVEL SEAT OPERATION

The driver's and mid-ship passenger's seats are two-way adjustable.

To move the seat forward or back, pull up on the lever ① located under the front of the seat. Move the seat to the desired position, then release the lever.

To rotate the seat, first move the seat to its fully forward position. Then, pull up on the lever ② located under the side of the seat. Release the lever once you begin to pivot. The seat will pivot freely up to 180°, and will automatically lock into the fully front-facing or side-facing position. There is also a friction lever ③ to adjust how easily the seat rotates.

The driver must always be locked into the full front-facing position before getting underway.

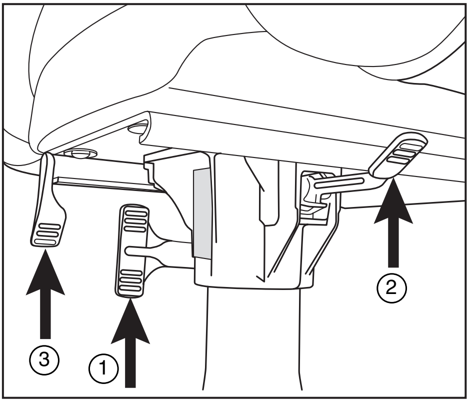

STEREO SYSTEM

A stereo CD player/receiver with four speakers is standard. There is also a remote control key pad at the swim platform and MP3 player input in a compartment at the helm. Refer to the stereo system owner's manual included with your boat.

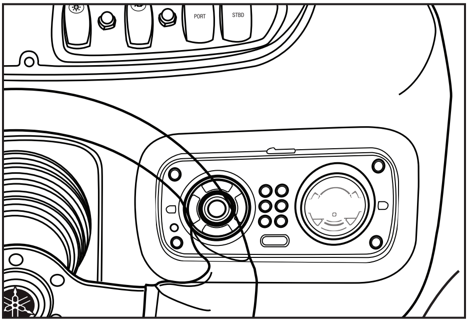

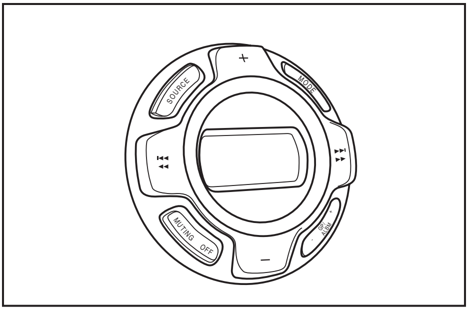

ENGINE HOOD

There is one hood latch located under the front of the rear seat. To open the engine hood, lift the latch hook upward and lift the hood.

Hood Latch

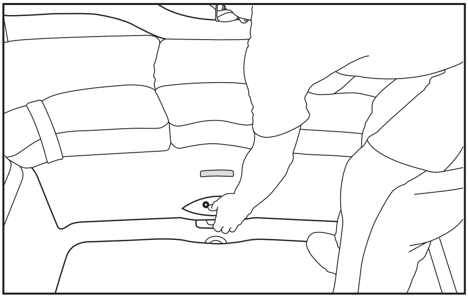

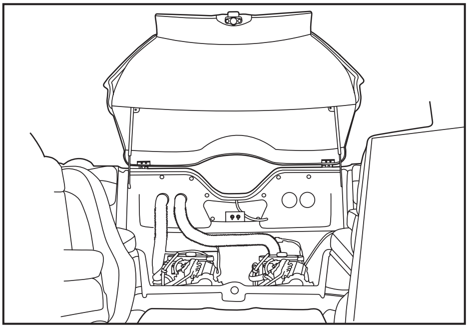

STORAGE COMPARTMENTS

Your boat has convenient on-board storage areas.

Bow Anchor Storage

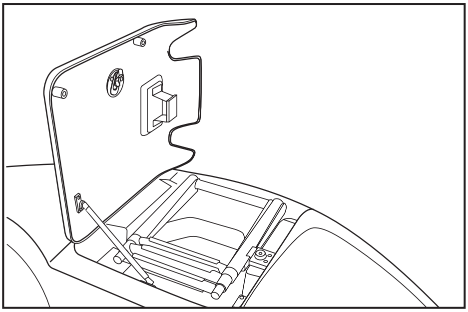

Under Front Seats

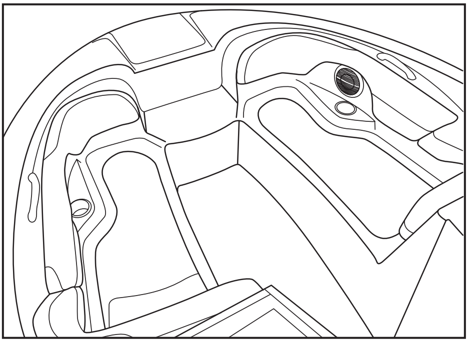

Pull up the seat cushions to access the storage compartments.

Front Locker

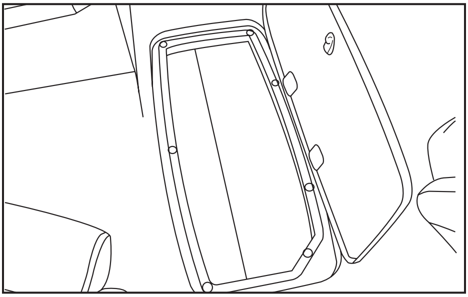

Self-Draining Cooler

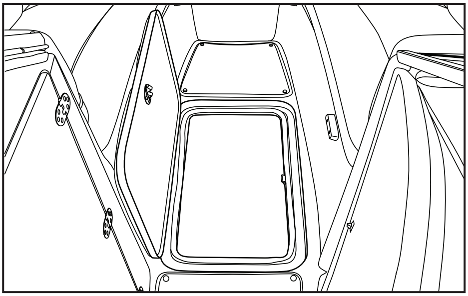

Glove Box

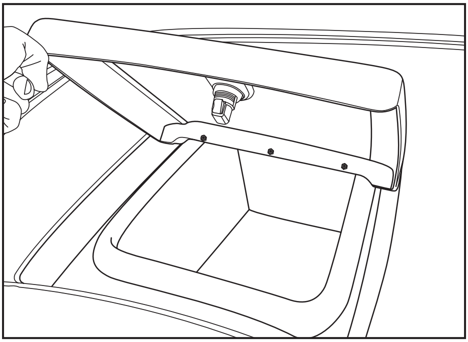

Port-Side Console

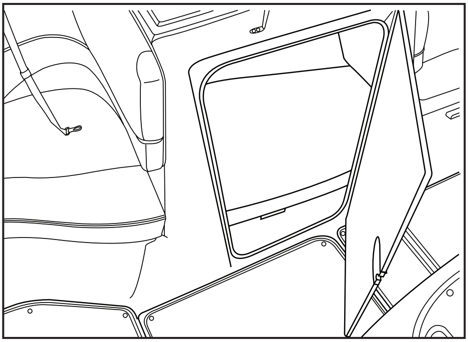

Under Rear Side Seats

⚠WARNING

Do not carry any flammable substances in the battery compartment or any heavy or metal items that can damage the battery or cause a short circuit. Sparks or fire could result.

NOTICE:

On the 212X model, the rear storage compartments also house the Ballast System sacks. Be careful not to store items in this area that could be crushed or damaged by the water sacks as they fill. See page 2-16 for more information.

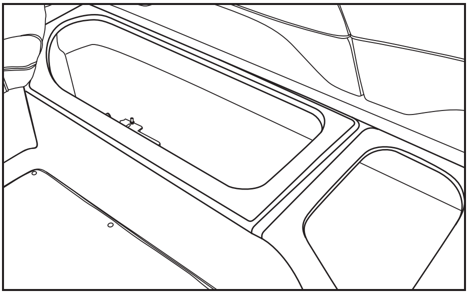

Pull up the seat cushions to access the storage compartments.

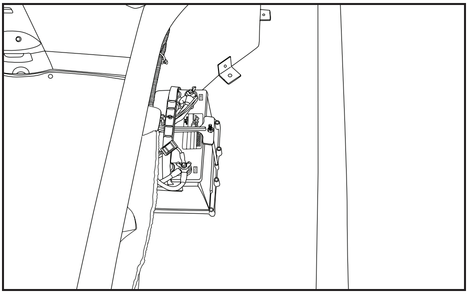

FRONT WALK-THROUGH

If desired, the Walk-Through to the bow of the boat can be closed.

Doorway

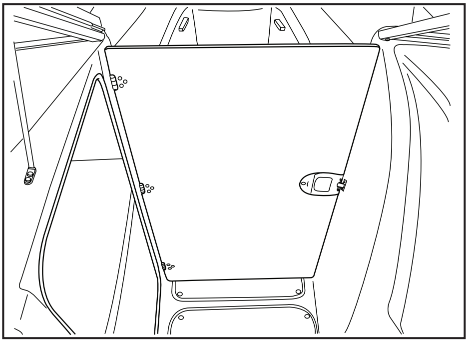

Unlatch the door from the port-side console storage compartment, and lock it into place on the driver's side console.

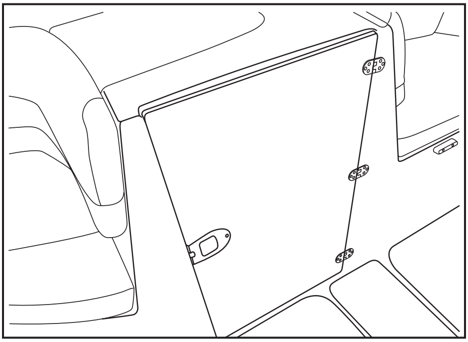

To open the doorway, unlatch the door from the driver's side console and lock it into place on the port-side storage compartment.

Windshield

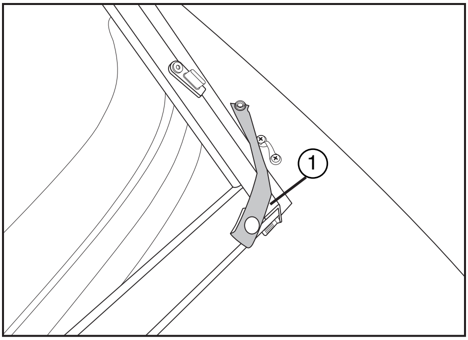

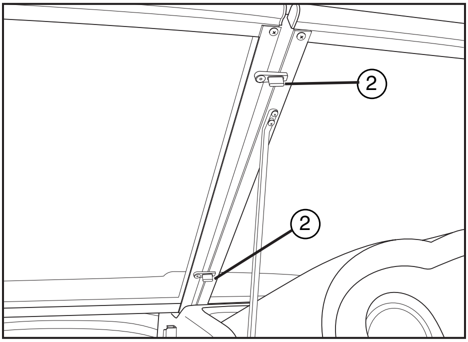

Unsnap the retaining strap ① from the windshield and pivot it into place. Rotate the two latches ② to keep the windshield secured. When the windshield is open, be sure to secure it with the retaining strap to keep it from moving while underway or trailering. **WARNING! To avoid injury, window must be secured when vessel is in motion.**

REAR WALK-THROUGH

For easy access from the cabin area to the stern patio area and swim platform, lift out and stow the center rear seat cushion.

Press the center seat cushion firmly into place for seating when underway.

SWIM PLATFORM

⚠WARNING

Stay away from the swim platform area while the engines are running. Exhaust gases coming from underneath it contain carbon monoxide, a colorless, odorless gas which may cause brain damage or death when inhaled. Symptoms include nausea, dizziness, and drowsiness.

The swim platform area provides a place to stand or sit while putting on skis or a wakeboard, and includes a ladder to make boarding from the water easier. To use the ladder, pull it out from underneath the swim platform until it can drop down. Before operating the boat, return the ladder to its storage position.

WAKEBOARD TOWER (212X MODEL)

⚠WARNING

Severe injury or death can result if you ignore any of the following:

- **Maximum towing capacity: 1 Person, 350 lb. (158 kg) max.**
- **Make sure tow rope is securely fastened to the tow pylon on the tower.**
- **Stay clear of the tow rope while pulling a wakeboard rider or skier.**
- **Do not climb, hang, or sit on the wakeboard tower.**

The Wakeboard Tower is provided as an elevated tow point suitable for wakeboards and similar towable recreational equipment. The center pylon can be used to attach a standard ski rope or other tow rope.

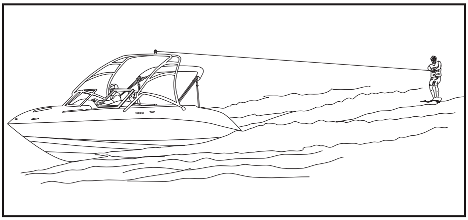

Choose only accessories designed for your boat's wakeboard tower. Your Yamaha dealer has a variety of genuine Yamaha accessories. Other accessories may also be available on the market. However, it is not possible to test all non-Yamaha accessories, nor have any control over the quality or suitability of them. Choose a genuine Yamaha accessory or one that is equivalent in design and quality.

COLLAPSING THE WAKEBOARD TOWER

The wakeboard tower can be collapsed for towing and for boat storage in a building or under a canopy or carport.

NOTICE:

Dropping the upper tower section while collapsing or raising it can damage the tower, the boat, or both. An assistant is highly recommended to help hold the upper tower section in place during the procedure.

Collapsing

1. Remove wakeboards and any other accessories from the wakeboard racks. Fold and secure the Bimini top (if up).
2. Remove the left and right screw knobs ① at the forward pivot points.

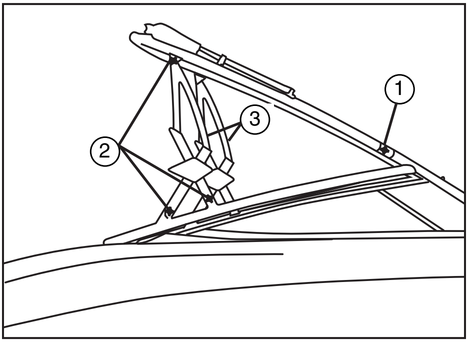

3. While supporting the upper section of the wakeboard tower, remove the remaining screw knobs ② and both of the tower supports ③.

4. Still supporting the upper section of the wakeboard tower, install the two short supports ④ using two screw knobs on each side. Install the tethered rings ⑤ into the ends of the upper tower support screw knobs to prevent them from loosening or coming out during operation.

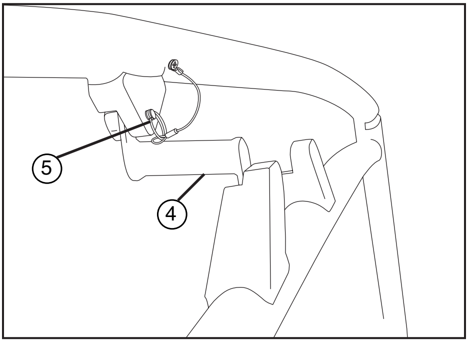

5. Carefully store the remaining screw knobs and the tower supports in a storage compartment in the boat.

Raising

1. Support the tower and attach the tower supports on both sides, leaving the screw knobs slightly loose.
2. While the assistant is pushing the upper tower section upward slightly, carefully thread the screw knobs into the forward pivot points into the tower base.
3. Once all of the knobs are threaded in, make sure each one is tightened securely. Install the tethered rings into the ends of the upper tower support screw knobs to prevent them from loosening or coming out during operation. ***NOTICE:*** **Be sure to use the tethered rings to secure the upper tower support knobs. Otherwise the knobs could loosen and be lost if they fall out.**

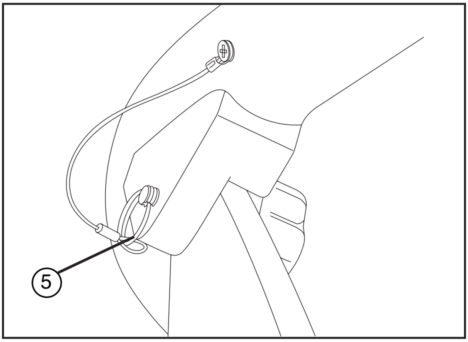

Chapter 3

OPERATION

FUEL AND OIL 3-1
Gasoline 3-1
Engine Oil 3-2

PRE-OPERATION CHECKS 3-4
Check List 3-4
Check Points 3-5

OPERATION 3-15
Starting the Engines 3-15
Stopping the Engines 3-17
Break-In Procedure 3-18

DRIVING YOUR BOAT 3-19
Getting to Know Your Boat 3-19
Learning to Operate Your Boat 3-19
Turning the Boat 3-20
Boating with Passengers 3-21
Boarding from the Water 3-21
Boarding from a Dock or Landing Jetty 3-22
Boarding from the Bow 3-22
Stopping 3-23
Docking 3-23
Leaving a Dock 3-24
Beaching 3-24
Anchoring 3-25
Crossing Wakes and Swells 3-26

POST-OPERATION CHECKS 3-27

TRAILERING 3-29
Hitch 3-29
Trailering Checklist 3-29
Backing Your Trailer 3-30
Launching 3-31
Loading 3-31
Lifting 3-32

FUEL AND OIL

GASOLINE

⚠WARNING

- **Gasoline and gasoline vapors are extremely flammable. To avoid fires and explosions and to reduce the risk of injury when refueling, follow these instructions.**
- **Gasoline is poisonous and can cause injury or death. Handle gasoline with care. Never siphon gasoline by mouth. If you should swallow some gasoline, inhale a lot of gasoline vapor, or get some gasoline in your eyes, see your doctor immediately. If gasoline spills on your skin, wash with soap and water. If gasoline spills on your clothing, change your clothes.**

NOTICE:

- **Do not use leaded gasoline. Leaded gasoline can seriously damage the engine.**
- **Avoid getting water and contaminants in the fuel tank. Contaminated fuel can cause poor performance and engine damage. Use only fresh gasoline that has been stored in clean containers.**

1) Before refueling, turn off the engines. Never refuel while smoking, or while in the vicinity of sparks, open flames, or other sources of ignition.
2) Refuel the boat in a well-ventilated area. If the boat is in the water, be sure it is securely moored to the fueling dock. All passengers must be out of the boat during refueling.
3) Remove the fuel tank filler cap, and then slowly add fuel to the fuel tank. Stop filling when the fuel just becomes visible in the bottom of the filler tube. Do not "top off" the tank, because gasoline could spill out.
4) Wipe up any spilled fuel immediately.
6) Install the fuel tank filler cap. Make sure that the fuel tank filler cap is securely closed.

Gasohol

Recommended fuel:
Regular unleaded gasoline with a minimum octane rating of 86
(Pump octane number) = (R + M)/2
90 (Research octane number)
Fuel tank capacity: 50 US gal (189 L)

There are two types of gasohol: gasohol containing ethanol and that containing methanol. Gasohol containing ethanol can be used if ethanol content does not exceed 10% and the fuel meets minimum octane ratings. Gasohol containing methanol is not recommended by Yamaha because it can cause fuel system damage or engine performance problems.

Ring Free Fuel Additive

As fuel mixture burns in your engine's combustion chambers, carbon deposits are left behind. Over time, these deposits can reduce performance and even cause engine damage. Marine engines tend to run at lower operating temperatures than other engines, making them more likely to accumulate these harmful deposits. Ring Free Fuel

Additive, available from your Yamaha dealer, is formulated to remove existing deposits and, when used continuously, prevent new ones from forming, while also helping to keep fuel injectors and other fuel system components clean for proper performance and longer engine life.

ENGINE OIL

Recommended oil:
Yamalube 4W

If Yamalube 4W is not available, use another 4-cycle oil that meets the following specifications.

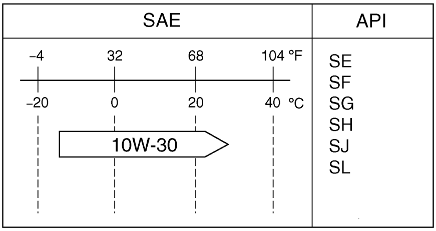

ENGINE OIL LEVEL

Check the oil level in both engines before each use. Check the oil on each engine when cold to be sure there is enough oil to run the engine

NOTICE:

Be sure the engine has enough oil but do not overfill. If there is too little oil, the engine can be damaged. If there is too much oil, the air filter can become saturated with oil, permanently damaging the filter and reducing engine performance. Follow the checking procedure carefully.

TIP:

- Each engine has an oil-tank system. It is normal for the oil level to vary depending upon whether the engine is cold or at operating temperature.
- Adding 1 US qt. (0.95 lit) of oil will raise the oil level on the dipstick by approximately 2.2 in. (56 mm).

To check oil, be sure the boat is level, either in the water or on the trailer. Open the engine compartment by pulling up on the two latches located under the front of the rear seat.

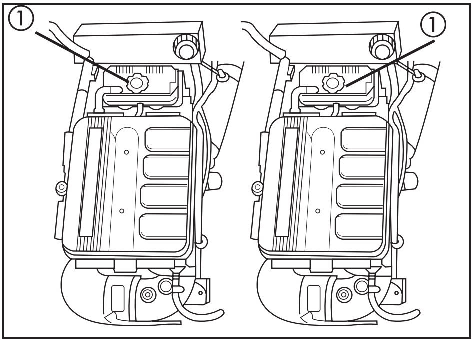

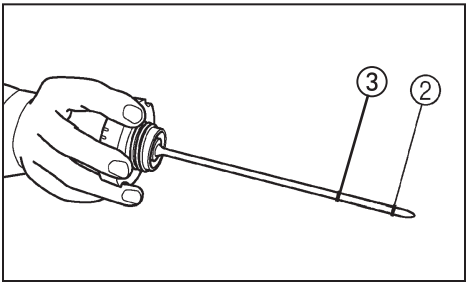

Cold Engine Check

1) Remove the oil tank filler cap ①, wipe the dipstick with a clean rag, and then screw the cap on securely. Remove the cap again and check the oil level.

2) If the level is at least at the minimum level "L" mark ② on the dipstick, but less than the "F" mark ③, the engine can be operated. ***NOTICE:*** **If the level is above the "F" mark, the engine is overfilled. Consult a Yamaha dealer to have oil extracted from the engine to avoid damage.**

3) If oil must be added, add just enough oil to raise the level to the "L" mark. Adding more oil could result in an overfilled engine once it warms up.

4) Repeat for the other engine.

Warm Engine Check

1) Be sure the engine is warmed to operating temperature.

TIP: The engines are at the proper operating temperature after they have been run for 5 minutes or more at 7000 rpm or above and then at a trolling speed for 2 to 3 minutes. If the boat is on the trailer, run the engine with the flush attachment at an idle speed for 6 to 8 minutes, or at least 13 minutes if air temperature is 59° F (15°C) or colder.

2) Remove the oil tank filler cap ①, wipe the dipstick with a clean rag, and then screw the cap on securely. Remove the cap again and check the oil level.

3) The oil level should be between the minimum and maximum level marks. If the level is below the "L" mark ②, then add only enough oil to raise the level above the "L" mark but never above the "F" mark ③. ***NOTICE:*** **If the level is above the "F" mark, the engine is overfilled. Consult a Yamaha dealer to have oil extracted from the engine to avoid damage.**

4) Repeat for the other engine.

PRE-OPERATION CHECKS

CHECK LIST

Before operating this boat, perform the checks in the following check list. Always follow the inspection and maintenance procedures and schedules described in this owner's/operator's manual.

⚠WARNING

Failure to inspect or maintain the boat properly increases the possibility of an accident or damage to the watercraft. Do not operate the watercraft if you find any problem. If a problem cannot be corrected by the procedures provided in this manual, have the boat inspected by a Yamaha dealer.

ITEM	CHECK	PAGE REF.
BEFORE LAUNCH OR OPERATION:		
STEERING	Check for proper steering operation.	3-5
THROTTLE	Check for proper throttle operation.	3-5
SHIFTING	Check for proper shift operation.	3-5
LIGHTS AND HORN	Check lights to be sure they operate. Press horn button to be sure it operates.	3-9 3-10
FIRE EXTINGUISHER	Check readiness of the extinguisher.	3-6
HULL	Check the hull for damage or cracks before launching.	
ACCESS PORT CAPS	Check for proper installation.	3-6
JET (WATER INTAKES	Check that no debris is in the intakes before launching.	3-7
FUEL SYSTEM	Check fuel system for leaks.	3-7, 4-10
FUEL AND ENGINE OIL LEVELS	Check fuel and oil level; add as necessary.	3-7
BATTERY	Check battery condition, mounting, and connection.	3-7
DRAINAGE SYSTEM	Check, and remove all water and fuel residue before launching. Be sure drain plugs are tightened.	3-8
ENGINE COMPARTMENT	Operate the blower for at least 4 minutes. Open engine hood and check to be sure no gasoline vapors are present.	3-9
ENGINE HOOD	Check that hood latch is secure.	2-18
BIMINI TOP	Check that the top is secure.	3-11, 3-13
AFTER LAUNCH		
SWITCHES	Check operation of the ignition start switches and engine stop switch lanyard.	3-10
COOLING WATER PILOT OUTLETS	Check that water comes out while the engines are running.	3-10

NOTE: Steering and Shifting Pre-Operation Checks will require two persons, one person to operate controls and one person to observe proper operation at the stern.

TIP: Pre-operation checks should be made each time the boat is used. These checks can be completed in a short time. It is worth the time spent to ensure safety and reliability.

CHECK POINTS

Steering

Make sure the wheel is not loose.

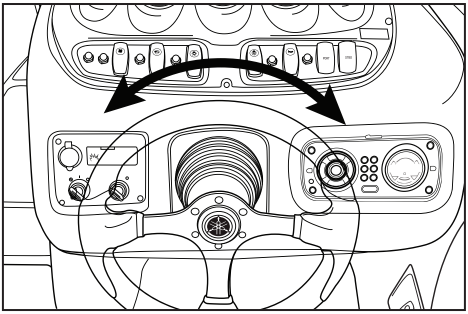

There should not be any free play, either in-and-out or in rotation. Turn the steering wheel full-right and full-left to make sure operation is smooth and unrestricted throughout the whole range.

Make sure both jet nozzles change directions as the steering wheel is turned. The jet nozzles should point to starboard (right) when the wheel is turned right. The jet nozzles should point to port (left) when the wheel is turned left. There should not be free play between the steering wheel and the jet nozzles.

Throttle/Shifters

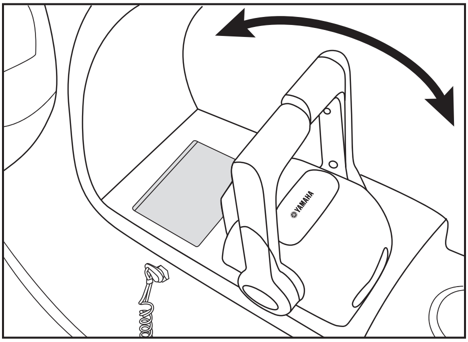

Move the control levers several times through their full range of motion. Operation should be smooth over the complete range of motion and the levers should return to Neutral without hesitation.

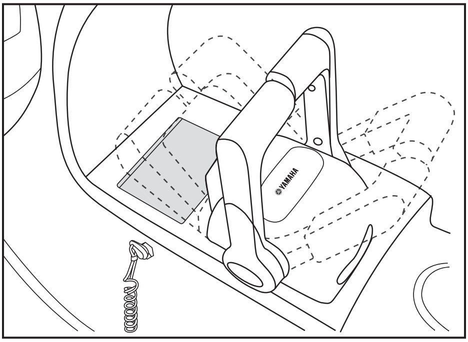

Before launching, make sure both jet pump gates drop down over the jet nozzles to their stopper positions when the control levers are moved to the Reverse position. Also be sure both jet pump gates return to the full-up stopper position when the levers are moved to the Forward position.

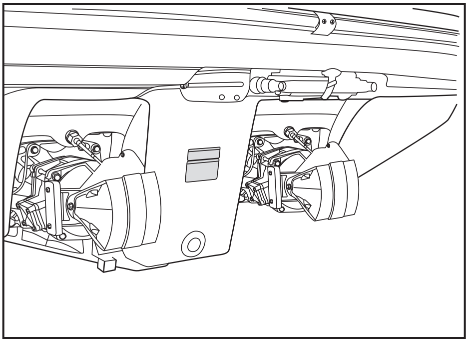

Fire Extinguisher

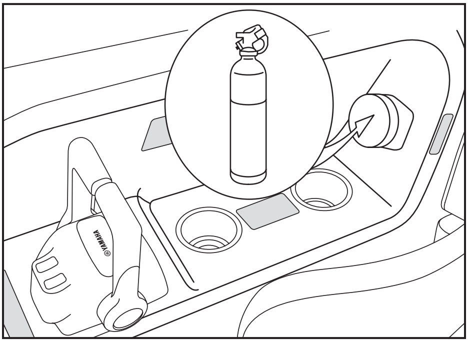

Make sure the fire extinguisher is aboard and full. See the instructions supplied by the fire extinguisher manufacturer to determine proper indication of condition.

The fire extinguisher canister is located inside the driver-side console storage compartment. Open the windshield cover, and then unscrew the canister to reach the fire extinguisher.

This boat is an inboard boat less than 26' long. A boat of this type MUST carry a fire extinguisher of a B-1 classification, with a capacity of two pounds or more, when navigating in waters controlled by the U.S. Coast Guard. In addition, most state and local boating laws also require that the craft carry a USCG-approved fire extinguisher whenever the boat is operated.

A fire extinguisher is not standard equipment with this boat. If you do not have one, contact your local Yamaha Boat dealer or a fire extinguisher dealer to obtain one meeting the proper specifications.

Access Port Caps

Lift the hatch on the rear platform. Pull up forcefully on the T-handle of each cap. If the cap will move, it is not installed properly. Refer to "Jet Pump Clean-Out Procedure" on page 5-5 for proper installation instructions.

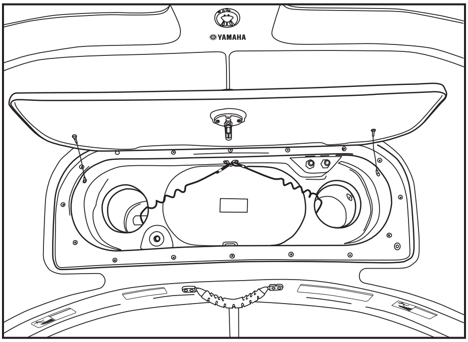

Jet Intakes

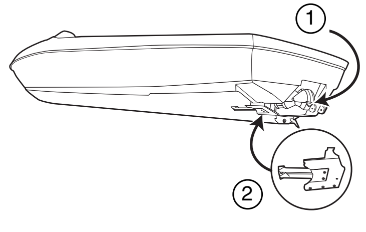

1. Jet Thrust Intakes
2. Intake Grates

Before launching the boat, carefully check the jet intakes under the boat for weeds, debris, or anything else that might restrict the intake of water. If the intakes are clogged, cavitation could occur, reducing jet thrust, and possibly damaging jet pump parts. In some cases, the engine may overheat because of a lack of cooling water, and damage could result. Engine cooling water is fed to the engine by the jet pumps (see page 3-10).

Refer to **Jet Pump Clean-Out** procedures on page 5-5 before attempting to remove weeds or debris from the jet intake or impeller areas. **WARNING! Rotating parts could cause severe injury or death. Before attempting to remove weeds or debris from the jet intake or impeller areas; shut off the engines, remove ignition key, then remove the engine shut-off switch cord from the shut-off switch.**

Fuel System

Refer to page 4-10, “FUEL SYSTEM INSPECTION,” for correct procedure.

Fuel and Engine Oil Levels

1) Turn the right switch key to ON. Wait for the fuel gauge needle to stop moving, then note the fuel level. Add fuel if necessary.

TIP: The fuel level is most accurate when the boat is sitting level on the trailer or in the water.

2) Open the engine hatch, then check oil level in the engines. Add as necessary (see page 3-2).

Battery

Check the battery condition and the battery electrolyte level. Make sure connections are tight and that battery is properly secured. **WARNING! The battery must always be fully charged and in good condition. Loss of battery power may leave you stranded. Never operate the boat if the battery does not have sufficient power to start the engine or if it shows any other signs of decreased power.**

Drainage System

Self-Bailing Deck—
Most water which enters the deck area bails automatically out the stern through the large drain hole in the deck.

A one-way check valve in the drain prevents water from traveling back to the deck during mooring or while moving in reverse.

Bilge Pump –

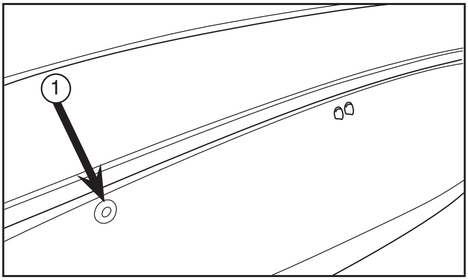

Your boat is equipped with a drainage system that channels water that enters the boat from the storage compartments to the bilge under the engine compartment. When the bilge pump is turned on (see page 2-14), the pump will sense when there is excessive water in the bilge and will automatically drain most of it through the outlet ①. For normal operation, turn the bilge pump switch on during boat use and turn it off when leaving the boat. ***NOTICE:*** **If the boat is to be left in the water after use, leave the bilge pump switch in the ON position. The pump will activate if needed to drain any water accumulating in the bilge.**

Drain Plug –

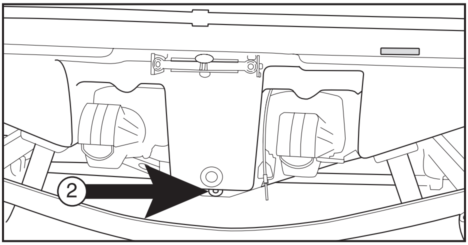

A drain plug ② is located at the center of the stern to allow more complete draining when the boat is removed from the water.

Engine Compartment and Fuel Compartment Drain Plug –

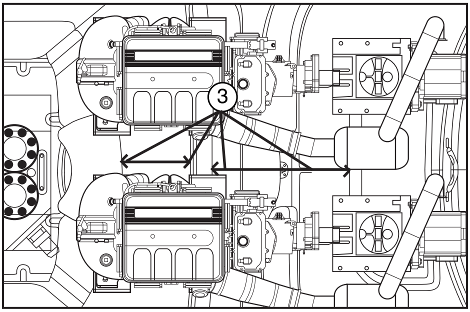

Water will not normally enter the engine compartment or fuel compartment areas during operation. If it does, open the drain plugs ③ and allow water to drain. Also open the engine compartment plug when flushing the engine area with fresh water after salt water operation.

NOTICE:

- **Excessive water in the engine compartment bilge can splash into the air cleaner and engine. This could cause engine damage.**
- **Be sure all drain plugs are tightened before operating your boat.**

If a fuel or fuel/water mixture drains from the fuel tank compartment drain or is found in the engine compartment, wipe it up immediately with dry rags. **WARNING! This indicates a fuel leak. Do not operate the boat until the source of the fuel leak is found and corrected. Gasoline and its vapors are highly flammable and explosive.**

Engine Compartment

⚠WARNING

Gasoline vapors can explode. Before starting the engines, operate the blower for at least 4 minutes and check the engine compartment bilge for gasoline vapors. Do not start the engines if you can smell fuel vapors in the engine compartment or if there are any loose electrical connections. Contact your dealer if there is a problem you cannot locate or correct.

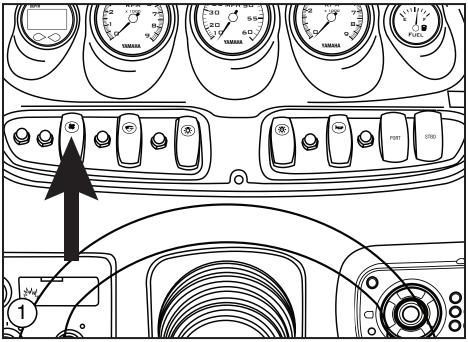

Operate the bilge blower switch ① for at least 4 minutes before starting the engines. Open engine hood and check to be sure no gasoline vapors are present. Check for fuel leaks or loose electrical connections.

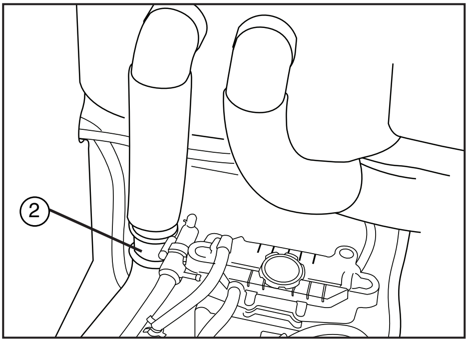

② Blower motor

Lights

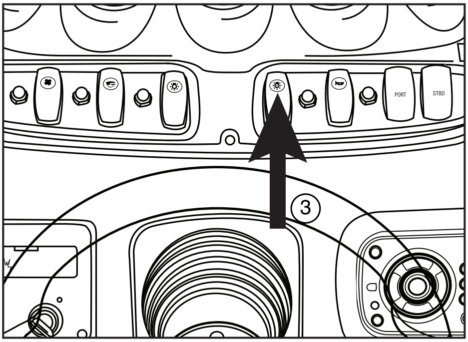

Check for proper operation of the bow, stern, and instrument lights by pressing the switch ③ on the control panel.

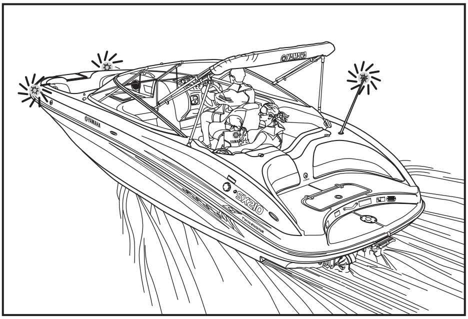

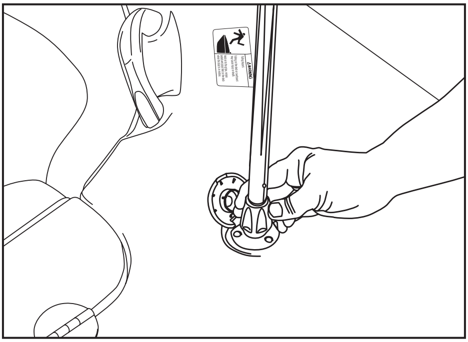

If the stern light is not installed, remove it from the storage area, lift the socket cover, and install it into the socket to check operation.

Horn

Press the horn switch ① to be sure the horn operates.

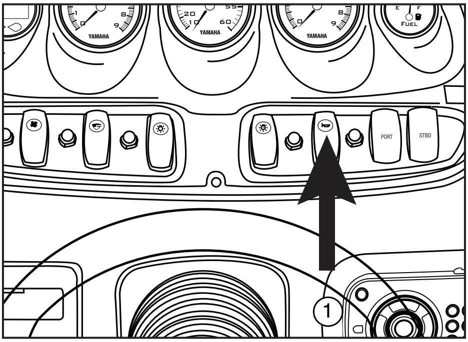

Engine Shut-Off Switch

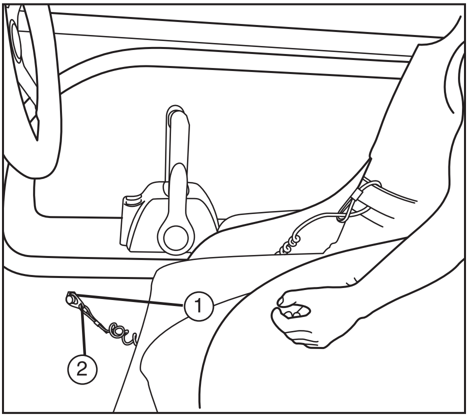

① Engine shut-off switch
② Clip with cord

First, place the boat in the water to provide adequate engine cooling. Start the engine, and then remove the engine shut-off switch clip, and verify that the engine stops.

Refer to pages 3-15 to 3-17, "STARTING THE ENGINES," for information on proper operation of the starter switch.

Cooling-Water Pilot Outlets

Check that water comes out from the pilot outlets while engine is running in the water. Refer to page 2-13 for correct operation of the device.

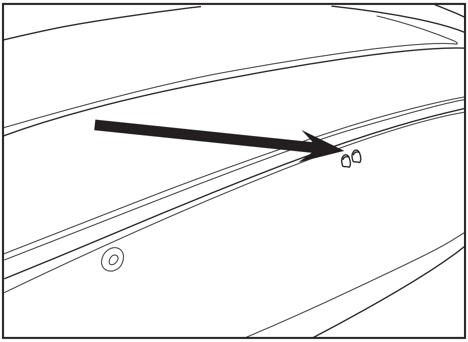

TIP: It may take up to 20 seconds for water to reach the pilot outlets when first launching the boat. The amount and force of the exiting water will vary with engine rpm.

NOTICE:

A continuous flow of water from the pilot hole shows that water is flowing through the engine cooling passages. If water is not flowing out of the pilot hole during operation, do not continue to run the engines. Overheating and serious damage could occur. See Overheat Warning System, page 2-13, for more information.

BIMINI™ TOP (212SS)

Raising from the fully collapsed storage position.

1) With an assistant, raise the top and secure the rear support poles to the rear support pole mounts with the lock pins.

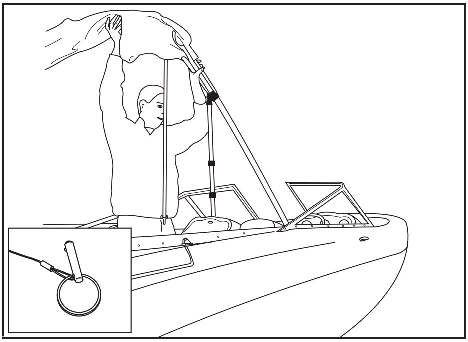

2) Unzip and remove the storage cover.
3) Unfold the top by pulling to the bow of the boat.

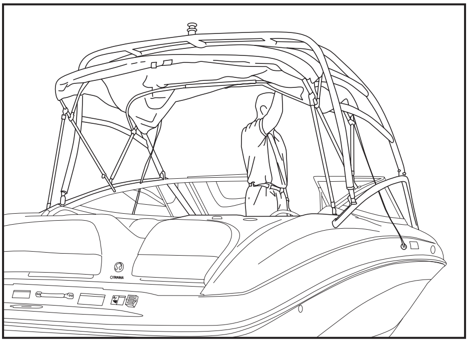

4) Attach the snap hooks to the strap eyes.

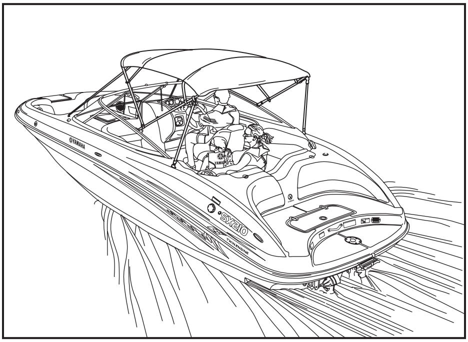

5) The top should be snug and wrinkle free. If the top is too loose or too tight, adjust the front straps by sliding the buckle up or down the strap as needed.

NOTICE:

Do not exceed 45 mph (72 km/h) with the Bimini top in the up position.

Storing
In The Upright Position

1) Raise the rear support poles.
2) Unhook the front straps and pull the top to the back.
3) Roll the fabric around the frames and zip the storage cover in place.

NOTICE:

Do not trailer the boat with the Bimini top in the fully extended or upright storage positions. Put the cover in the fully collapsed position to avoid damage.

Storing
In the Fully Collapsed Position

1) Follow the steps for storing in the upright position.
2) Remove the snap pins holding the rear support poles to the mounting brackets.
3) Lower the top onto the rear deck/ hatch.

Trailering with the Bimini Top

The Bimini top must be secured to the boat when it is being trailered. When trailered with a Genuine Yamaha Cover, simply store the Bimini top in the fully collapsed position and install the cover. If a cover is not used, wrap an elastic cord around the top and secure the ends to the ski tow hook to restrict movement.

Removing the Bimini Top

1) Follow the steps for storing in the fully collapsed position.
2) Remove the lock pins holding the Bimini top to the mounting brackets.
3) The top can now be removed from your boat.

When reinstalling the Bimini top, simply reverse the removal steps making sure the lock pins are fully engaged.

See page 4-4 for Bimini top care information.

BIMINI™ TOP (212X MODEL)

The Bimini top is normally covered and secured to the top rail of the Wakeboard Tower. To deploy the top, follow the steps below:

1) Unclip the two fasteners that hold the Bimini storage cover and top to the Wakeboard Tower rail. Remove the storage cover.

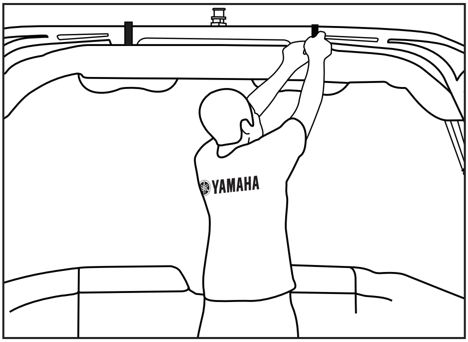

2) Unwrap the top canvas and attach the three zippered flaps around the rear top rail of the Tower.

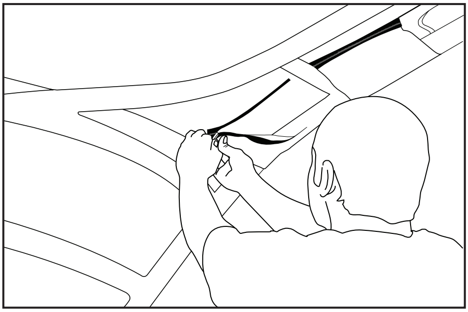

3) Push the canvas and top frame forward. Attach the front bow of the frame to the Wakeboard Tower with the lock pins ①. Unclip the two front vertical support poles. Pull them down and attach them to the Wakeboard Tower with the lock pins ②.

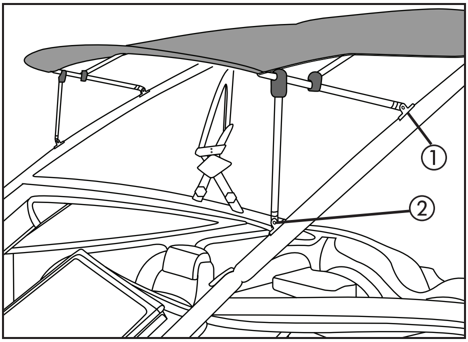

NOTICE:

Do not exceed 45 mph (72 km/h) with the Bimini top in the up position.

Storing the Bimini Top

1) Remove the pins holding the front vertical support poles and the front bow to the Wakeboard Tower. Pull the top back against the Wakeboard Tower.
2) Roll the fabric around the frames and zip the storage cover into place.

Removing the Bimini Top

1) Follow the steps for Storing the Bimini Top
2) Remove the lock pins holding the Bimini top to the Wakeboard Tower.
3) The top can now be removed from the boat.

When reinstalling the Bimini top, simply reverse the removal steps making sure the lock pins are fully engaged.

See page 4-4 for Bimini care information.

BIMINI TOP EXTENSION

After erecting the Bimini top the top extension may be put up. Attach the support pole ① to the rear mounts ② on the Wake Board Tower bases.

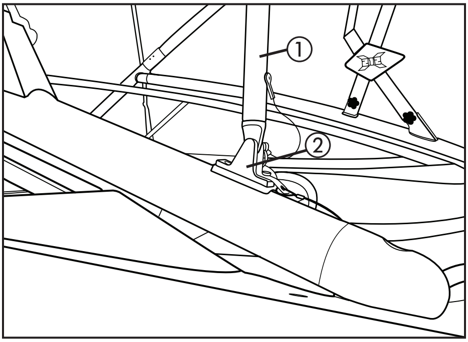

Raise the top extension and zip the three sections of the fabric to the main top.

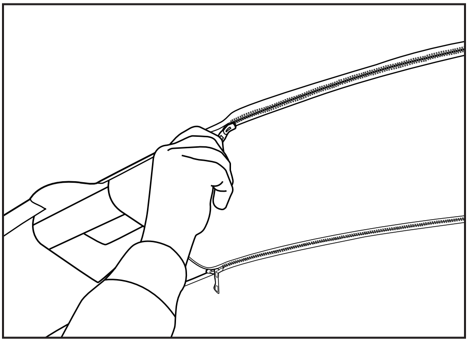

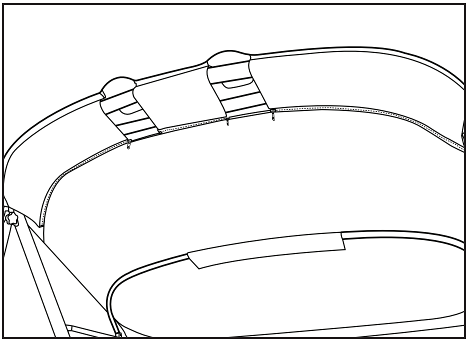

Secure the tension straps to the stern cleats and adjust as needed to remove wrinkles.

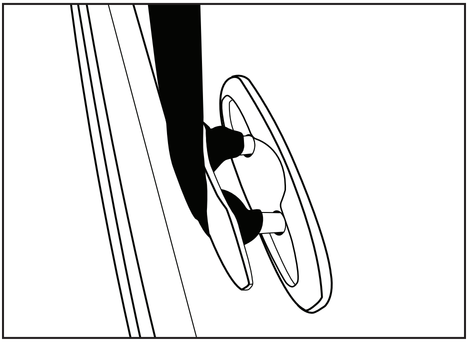

OPERATION

STARTING THE ENGINES

⚠WARNING

SEVERE INJURY OR DEATH MAY RESULT IF YOU IGNORE ANY OF THE FOLLOWING:

- **Before operating your boat, become familiar with all controls. Consult your Yamaha dealer about any control or function you do not fully understand. Failure to understand how the controls work could cause an accident or prevent you from avoiding an accident.**
- **Attach the engine shut-off switch cord to your personal flotation device or your arm or leg, before operating. Failure to attach cord could result in a runaway boat if operator is ejected.**

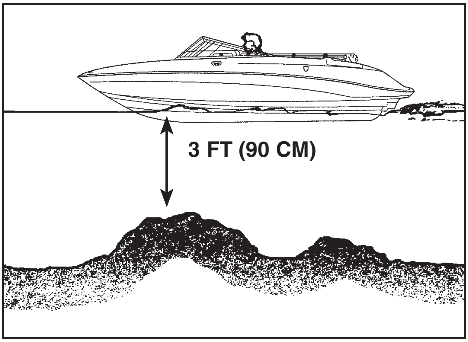

1) Always make sure the boat is launched and used in waters that are free from weeds and debris, and at least 3 ft. (90 cm) deep. **WARNING! Never operate in water that is less than 3 ft. (90 cm) deep. You increase your chance of hitting an underwater obstacle. You could be injured. Pebbles or sand can also be sucked into the jet (water) intake, damaging the impeller.**

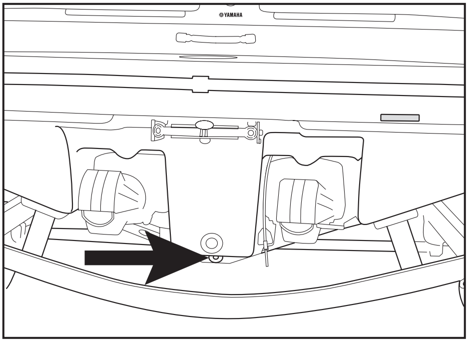

NOTICE:

There is a hull drain plug at the bottom of the stern in the center. Be sure it is securely tightened before launching the boat.

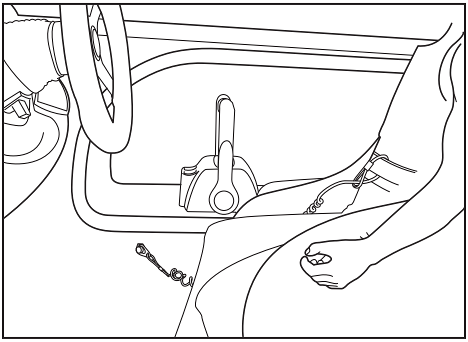

2) Attach the engine shut-off cord to your PFD. Install the cord clip onto the engine shut-off switch by pushing the clip groove over the nut beneath the knob. Be sure the cord is not wrapped around the steering wheel or tangled in the controls.

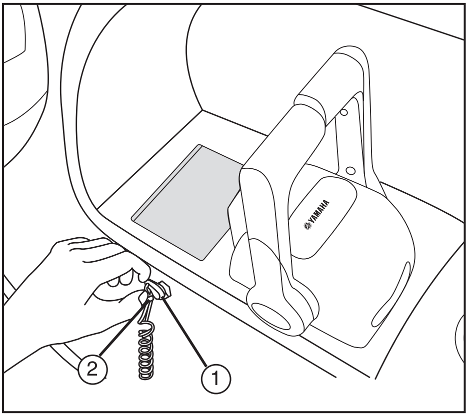

① Engine shut-off switch
② Clip with cord

TIP: It is not possible to start the engine with the clip removed from the engine shut-off switch. However, the starter motor will turn the engine over.

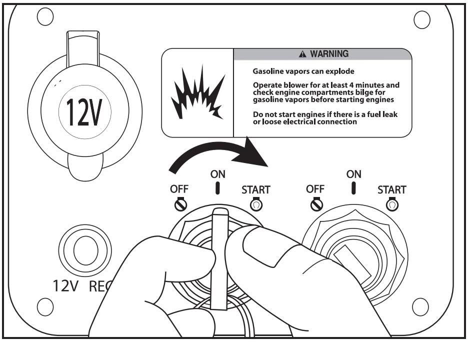

3) Put the control levers in the Neutral position. The starter motor will not operate unless the shift lever is in Neutral. Turn the ignition key to "Start." When the engine starts, release the key. If the engine does not start after 5 seconds of cranking, release the key. Wait at least 15 seconds before trying to start the engine again.

NOTICE:

- **Never turn the ignition key to "Start" while the engine is running. The starter mechanism could be damaged.**
- **If the starter motor is engaged continuously for more than 5 seconds, the battery will become quickly discharged and it will be impossible to start the engine. The starter motor may also be damaged if it is engaged continuously for more than 5 seconds.**

On this boat, the engines are connected directly to the drive unit. Starting either engine generates some thrust immediately. Only enough throttle should be applied to keep the engine at a fast enough idle to stay running.

NOTICE:

Do not operate the boat with just one engine running. Severe engine damage could result because water can flood the non-operating engine through the cooling water intake. If single-engine operation is unavoidable, operate the boat at a "no wake" speed only.

STOPPING THE ENGINES

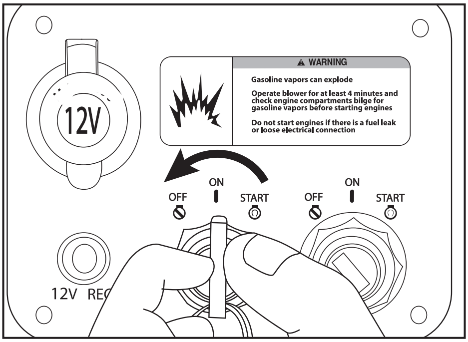

To stop the engine, return the throttle levers to the idle position, then turn the main switches to "Off." The engines can also be stopped by pulling the engine stop switch lanyard.

⚠WARNING

Once the engines have stopped, you have NO STEERING CONTROL over the boat. You could collide with another boat, a dock, or other obstacle.

Remove the ignition keys and the engine stop switch lanyard if the boat will be left unattended.

Stopping the engines immediately after operating at high rpm is not recommended. Let the engines cool off at idle or low speed for a few minutes first.

BREAK-IN PROCEDURE

The engine break-in period is essential to allow the various components of the engine to wear and polish themselves to the correct operating clearances. This ensures proper performance and promotes longer component life.

1) Launch the boat and start the engines (see page 3-15).

2) For the first 5 minutes, run the engines at trolling speed. For the 30 minutes of operation after that, keep the engine speed below 5,000 rpm. For the hour of operation after that, keep the engine speed below 8,000 rpm.

3) Proceed with normal operation.

DRIVING YOUR BOAT

GETTING TO KNOW YOUR BOAT

Operating your boat requires skills acquired through practice over a period of time. Take the time to learn the basic techniques well before attempting more difficult maneuvers.

Boating with your new boat can be a very enjoyable activity, providing you with hours of pleasure. But it is essential to familiarize yourself with the operation of the boat to achieve the skill necessary to enjoy boating safely. Before operating this boat, read this Owner's Manual, the Operation Instruction Card, and all Warning and Caution labels on the boat. Pay particular attention to the safety information in Chapter 1. Read all warning and caution labels on your boat.

The boat is designed to carry one operator along with up to eight passengers, and cargo, as long as the total weight of people and cargo does not exceed 1840 lb (834 kg). Never have more than nine people in the boat (or eight persons if a water skier is being pulled).
On the 212X model, a full ballast weighs 750 lb. (340 kg), which must be included in the maximum load.

LEARNING TO OPERATE YOUR BOAT

Before boating, always perform the Pre-Operation Checks listed on page 3-4. The short time spent checking the machine's condition will reward you with added safety and a more reliable boat.

Know and follow U.S. Coast Guard, state, and local laws when operating your boat.

Select a wide area to learn in, where visibility is good and other boat traffic is light. Keep the proper distance from other boats and vehicles. Do not operate where people are swimming.

Always attach the engine stop switch lanyard to your personal flotation device before operating.

You and all other passengers must always wear a U.S. Coast Guard-approved personal flotation device when riding in the boat. You should consider wearing water shoes, eye protection, gloves, and other protective apparel. Water sports increase your risk of injury from contact with your boat, other vessels, docks, rocks, or coral.

A water-skier should wear protective clothing. Severe internal injuries can occur if water is forced into body cavities as a result of falling into the water or while reboarding. Normal swimwear does not adequately protect against forceful water entry into rectum or vagina. The skier should wear a wetsuit bottom or clothing that provides equivalent protection. Such clothing includes thick, tightly woven, sturdy, and snug fitting apparel such as denim, but does not include spandex or similar fabrics like those used in bicycle shorts.

Grip the wheel firmly and keep both feet on the deck when driving the boat.

TURNING THE BOAT

⚠WARNING

- **Do not pull the throttle levers back to idle when trying to steer away from objects – you need throttle to steer.**
- **Be sure passengers are holding on before making turns. An unprepared passenger could lose balance and fall.**

Steering control depends on the combination of steering wheel position and the amount of throttle.

Water sucked in through the intake grate is pressurized by the impeller in the jet pump. As the pressurized water is expelled from the pump through the jet thrust nozzle, it creates thrust to move and steer the boat. The higher the engine speed, the more thrust is produced.

The amount of jet thrust, in addition to the position of the steering wheel, determines how sharply you turn.

A. More throttle produces high thrust, so the boat will turn more sharply.

B. Less throttle produces low thrust, so the boat will turn more gradually.

C. Pulling the levers back to idle or Neutral produces only minimum thrust. If you are traveling at speeds above trolling, you will have rapidly decreasing ability to steer without throttle. You may still have some turning ability immediately after pulling the throttles back to idle, but one the engine slows down, the boat will no longer respond to steering wheel input until you apply throttle again or you reach a trolling speed.

   At trolling speed, the boat can be turned gradually by steering wheel position alone using just the amount of thrust available at engine idle.

D. If the engines are stopped, there is no thrust. The boat will go straight even though the steering wheel is turned.

YOU NEED THROTTLE TO STEER.

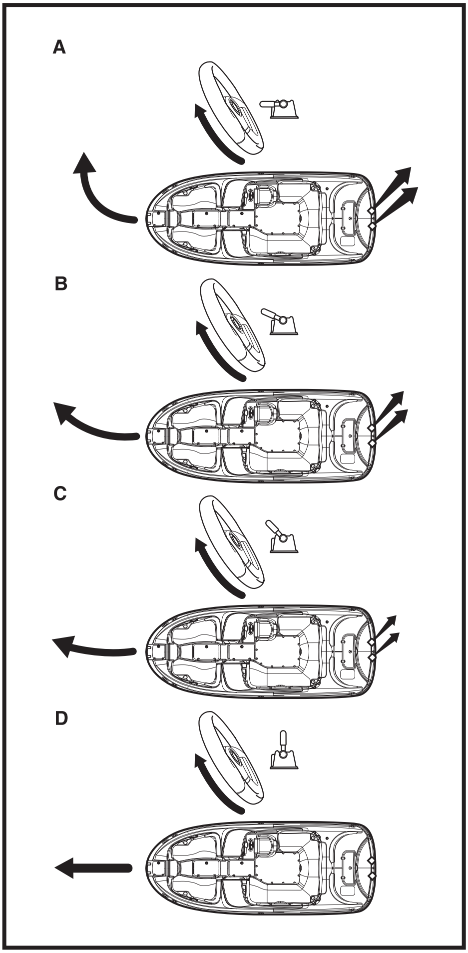

TURNING LEFT

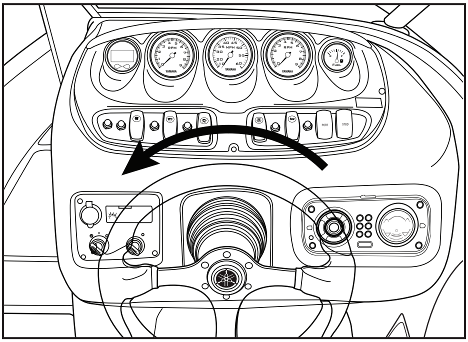

TURNING RIGHT

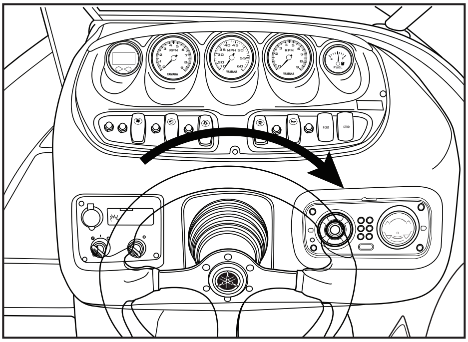

BOATING WITH PASSENGERS

⚠WARNING

When passengers are on board, make sure they are seated and holding on before you start to accelerate. An unprepared passenger could lose balance and fall.

Your boat is designed for one operator and up to eight passengers only. Never have more than nine people in the boat. Passengers must sit in one of the seats and hold onto the grips. Passengers should sit so the weight in the boat is balanced from side-to-side and bow-to-stern as much as possible. If the passenger seat in front of the helm is used, be sure the operator's view ahead is not obstructed.

BOARDING FROM THE WATER

⚠WARNING

Severe internal injuries can occur if water is forced into body cavities as a result of being near the jet thrust nozzles.

- **Do not board from the rear, use swim platform, or swim behind boat if engines are running.**
- **Stay away from the back of the boat when engines are running.**

Stay away from the swim step while the engines are running. Exhaust gases coming from underneath it contain carbon monoxide, a colorless, odorless gas which may cause brain damage or death when inhaled. Symptoms include nausea, dizziness, and drowsiness.

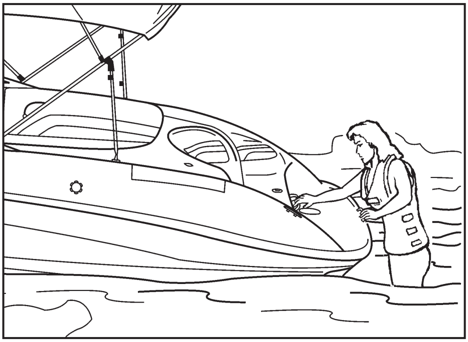

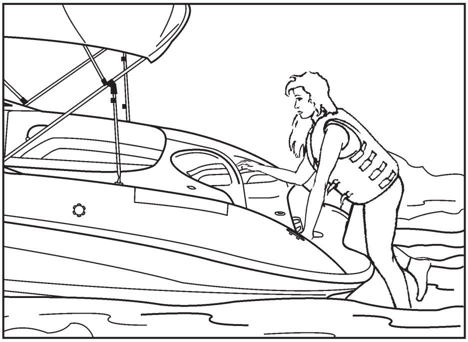

1) Be sure engines are off, then move to the stern of the boat. Pull out the ladder and climb up onto the step. Return the ladder to the stowed position before climbing into the boat.
2) Climb up onto the swim platform, then sit in one of the seats provided.

BOARDING FROM A DOCK OR LANDING JETTY

1) Board the boat from the side. One person should board at a time by stepping into the boat. Never jump in. Avoid stepping on slick gelcoat surfaces on the boat's gunwales, especially if wet.
2) Sit in one of the seats provided and put both feet on the deck.

BOARDING FROM THE BOW

A ladder is available when boarding from the bow of the boat is desired, such as when the boat is beached.

1) Open the Bow Anchor Storage compartment (see page 2-18).
2) Extend the front ladder, then close the storage compartment's cover to use as a step
3) When finished boarding, retract and stow the ladder under the compartment cover.

STOPPING

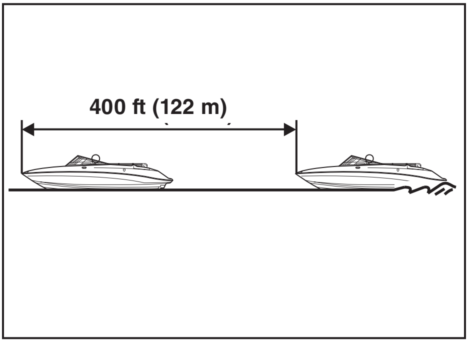

⚠WARNING

- **You will lose steering control if you completely pull the throttles back to idle. You need throttle to steer.**
- **Do not use the reverse function to slow down or stop the boat from planing speed as it could cause you to lose control, be ejected, or impact the steering wheel or other parts of the boat. This could increase the risk of serious injury.**

The boat is not equipped with a separate braking system. It is stopped by water resistance after the throttle levers are moved back to idle. From full speed, the boat stops in approximately 400 ft. (122m) after the throttle is moved back to idle. The stopping distance varies depending on gross weight, water surface conditions, and wind direction. The stated straight-line stopping distance should be used for a reference. The boat slows down as soon as the throttle levers are returned to idle but will coast for a distance before fully stopping. If you are not sure you can stop in time before hitting an obstacle, apply throttle and turn in another direction.

DOCKING

1) Make sure no obstructions, boats or swimmers are close to the boat. Come to a stop before you reach the dock.
2) Notice how wind and water currents are affecting boat movement as you attach your mooring lines and fenders.
3) Approach the dock at idle speed. Use reverse as necessary during slow speed maneuvering to help control speed and direction. Position the boat according to wind and water conditions. **WARNING! Do not use your hand, arm, or other part of your body to try to keep the boat from hitting the dock. You could be injured if the boat pushes against the dock.**

Wind or current pushing boat away from dock:
Slowly approach the dock at about a 45° angle. Secure the bow to the dock, then use engine thrust or a boat hook to gently move the stern to the dock.

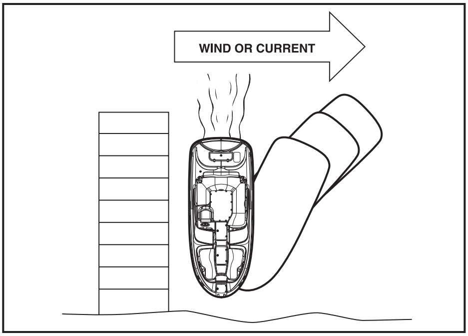

Wind or current pushing boat toward dock:

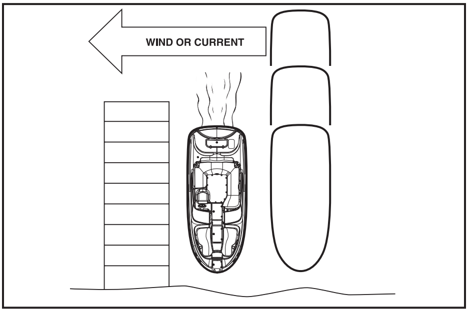

Slowly maneuver to a shallow angle and allow the boat to move toward the dock.

No wind or current:
Approach the dock at a shallow angle. Secure the bow to the dock, then use engine thrust or a boat hook to gently move the stern to the dock.

LEAVING A DOCK

Because boats steer from the stern, the stern first moves in the direction opposite your desired turn. It is especially important to understand this characteristic when leaving a dock. If you simply turn the wheel to steer the bow away from the dock, as you would when driving a car out of a parking space, you will drive the stern of the boat into the dock. Following is a basic maneuvering technique which can be used in most circumstances.

1) With engines idling and the bow still moored to the dock, turn the steering wheel toward the dock. This will start to move the stern of the boat away from the dock.
2) When the stern is out a few feet, release the bow mooring then steer in the direction you want the bow to move. Open the throttle slightly and begin to move away from the dock.

BEACHING

1) Make sure no obstructions, boats or swimmers are near the beach.
2) Approach the beach slowly and stop the engines when the water is about 3 ft. (90 cm) deep. Remember: turning is impossible with the engine stopped.
3) Get out of the boat and pull the bow up on the beach.
4) When leaving the beach, push the boat out into water that is at least 3 ft. (90 cm) deep before starting the engines.

NOTICE:

- **Small pebbles, sand, seaweed, and other debris can be ingested into the jet intake and impair or damage the impeller. Always stop the engines before beaching the boat. Be sure the boat is in water 3 ft. (90 cm) deep before starting the engines again.**
- **Do not beach the boat on rocky beaches. The hull gelcoat and exposed pump housings can be damaged.**
- **Pay attention to shifts in tides. Beaching at high tide may make it impossible to re-launch the boat if the tide recedes.**

ANCHORING

⚠WARNING

Always anchor from the bow. Anchoring from the stern will make the boat unsteady. A strong current can pull a stern-anchored boat underwater.

Select an anchor appropriate for your boat and water conditions. A “danforth” (or fluke) type anchor is suitable for most applications; your dealer can help you choose an anchor.

1) Make sure the anchor line is securely tied to the anchor and to the bow eye.
2) Move the boat to the spot where you want to lower the anchor, heading the boat into the wind or current. Stop the boat, then lower the anchor until it hits bottom.
3) While keeping tension on the line, slowly back up the boat until you have let out line that is 4 to 6 times the depth of the water. For example, if you are anchoring in 10 feet of water, let out 40 to 60 feet of line. Secure the line.
4) Pull on the line to be sure the anchor is holding. Also, periodically check your boat’s position against the shoreline to make sure it is not drifting and dragging the anchor. Reset if necessary.
5) To pull in (“weigh”) the anchor, start the engines and move forward, keeping tension on the line as you pull it in. When the anchor line is straight up and down, pull hard to lift the anchor from the bottom material.
6) If the anchor is stuck on the bottom, try this: Let out a few feet of anchor line and secure the line to the boat, again. Slowly maneuver the boat around the anchor until the anchor pulls loose. Keep the line taut during this procedure.

CROSSING WAKES AND SWELLS

You will not always have flat, smooth water. There will be swells and wakes from other boats, etc.

The best way to cross wakes and swells is with the least jolt to you and the boat. Small swells are not as difficult to cross as larger swells or wakes. Crossing a sharp wake gives more of a jolt than a broad swell.

To cross a wake or swell, change your speed and choose the angle at which you cross the wake or swell. Usually, a slower speed and "quartering" the wake (crossing at an angle) will reduce the jolt.

Two other things you may notice. The first is that crossing a group of wakes or swells is not as easy or smooth as crossing just one wake. The second is that when you quarter the wake or swell the boat will try to steer away from the wake or swell. When crossing at a 45° angle, you may not notice this, but at a smaller angle, say 10°, it can be very strong. Be prepared to steer and balance as necessary.

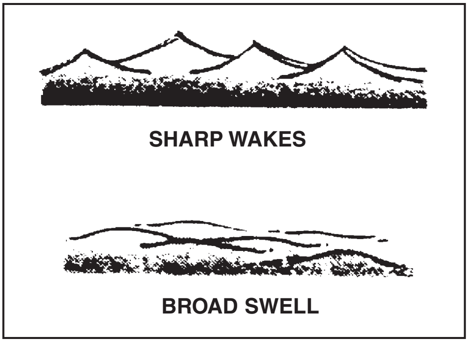

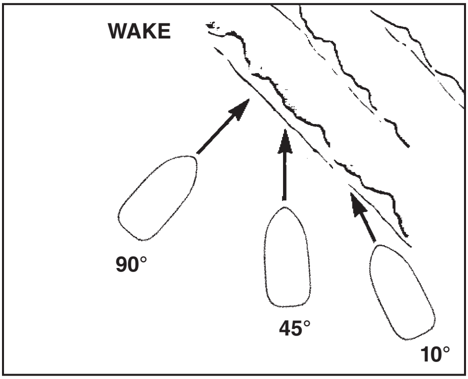

POST-OPERATION CHECKS

POST-OPERATION CHECKS

These post-operation procedures are developed to help preserve the long-term appearance and reliability of your boat. Perform these procedures as soon as possible after the boat is loaded back on the trailer after the day's use.

Some owners prefer to moor their boat seasonally, rather than keeping it on the trailer between uses. Extended mooring is not recommended. Proper flushing of the cooling system on each engine is not possible with the boat in the water. In addition, conditions such as stray electrical voltage in the water, marine organisms, and saltwater corrosion can adversely affect the life of many boat components. ***NOTICE:*** **Leaving the boat in the water for extended periods will accelerate the rate of normal deterioration of the jet pump components, sacrificial anodes, hull finish and other components.**

If you do decide to moor your boat, be sure to remove it from the water periodically to clean the hull and jet pump area. The frequency of maintenance required will depend upon whether the water is salt or fresh and other local water conditions.

1) After putting the boat on the trailer, flush cooling system on each engine to prevent the cooling system from clogging up with salt, sand, or dirt. Refer to page 4-1 for the cooling system flushing procedure.
2) Drain residual water from the exhaust system by starting the engine, then alternately pushing the control lever up to half throttle and back to idle for 10 to 15 seconds.

NOTICE:

Never run the engine at full throttle or for more than 15 seconds while the boat is out of the water. The engine may overheat and/or seize.

3) Wash down the hull, helm, and both jet drive units with fresh water.
4) Open the rear platform hatch, and check for any water pooled on top of the clean-out port caps. If water is found, remove the caps, let water drain, then reinstall the caps. See Page 5-5 for more information.

5) Remove hull drain plug ① and the engine compartment drain plugs ②. Rinse the engine compartment with a small amount of fresh water. Be careful not to get water on the carburetor or electrical components. Allow any water in the bilge to drain out. After the water has drained, wipe the engine compartment and bilge with dry rags. Reinstall all drain plugs.

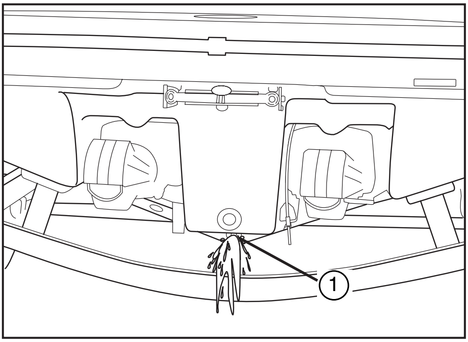

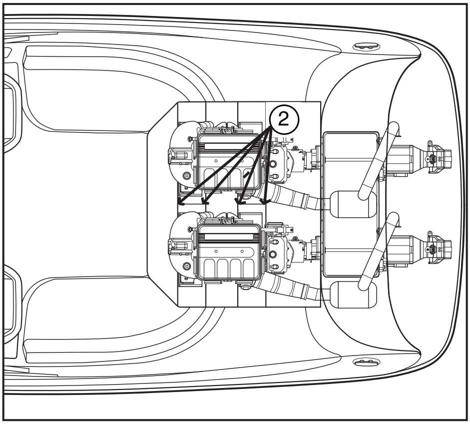

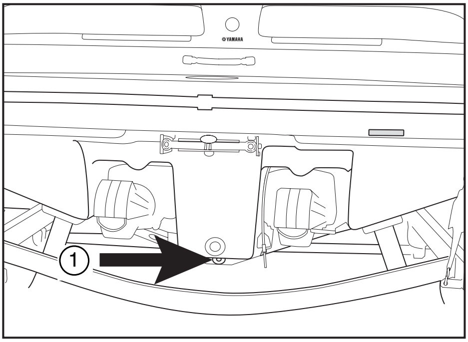

NOTICE:

Tighten the hull drain plug ① securely before launching the boat. Clean any foreign material, such as dirt or sand, from the threads before installing the drain plug.

6) Spray a rust inhibitor, such as Yamaha Silicone Protectant and Lubricant, on metallic parts to minimize corrosion.

TRAILERING

⚠WARNING

Avoid accident and injury from improper trailering:

- **The trailer must be matched for the boat's weight and hull.**
- **The towing vehicle must have the capacity of pulling the load. Pulling a load that exceeds the towing capacity may cause loss of control.**
- **Be sure the boat is secured to the trailer and the trailer is properly hitched to the towing vehicle before towing.**
- **Read the manuals supplied with the trailer by the manufacturer.**

A trailer is provided as standard equipment with your boat. If you need to obtain another trailer, choose one that is manufactured to carry a boat of the size and weight of your boat. Check the certification label on the left forward side of the trailer. This label is required to show the Gross Vehicle Weight Rating (GVWR), which is the load carrying capacity of the trailer plus the trailer's weight. Be sure that the total weight of your boat, any cargo, and the trailer weight itself does not exceed the GVWR.

HITCH

The trailer hitch ball must match the size of the socket on the trailer hitch coupler. Hitches are divided into classes that specify the gross trailer weight (GTW) and the maximum tongue weight. Always use a hitch rated for the same or higher class. Use a bolted-on or welded-on hitch; clamp-on bumper hitches are not recommended. Be sure the trailer hitch's release handle is latched with the lock pin installed before towing.

Use safety chains between the towing vehicle and the trailer so the trailer will not detach completely from the towing vehicle if it accidentally comes loose from the hitch ball. Crisscross the chains under the trailer tongue so the tongue will not hit the road surface if it falls loose. Rig the chains as tightly as possible while allowing just enough slack to permit tight turns.

Be sure the tongue weight (vertical weight on the hitch point) is correct. Generally, 5% to 10% of the combined weight of the boat and trailer should be on the tongue. Too much or too little weight can cause difficult steering or trailer swaying.

TRAILERING CHECKLIST

- Check your state laws to be sure your trailer meets all regulations, such as proper licensing, brake, axle load, and safety chain requirements.
- Check trailer for any loose fasteners or damaged parts.
- Check tires for proper inflation.

- Check wheel bearings and wheel lug nuts before each trip.
- Check tail, brake, and turn signal lights for proper operation.
- Secure the bow of the boat to the trailer with the winch line and also with the chain. Secure the stern cleats to the trailer with tie-downs.

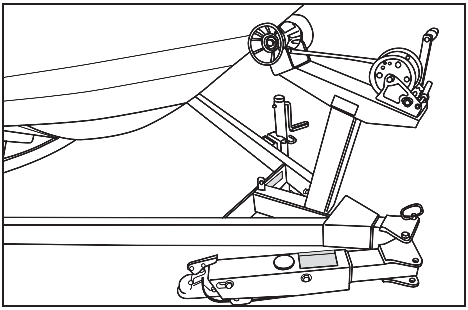

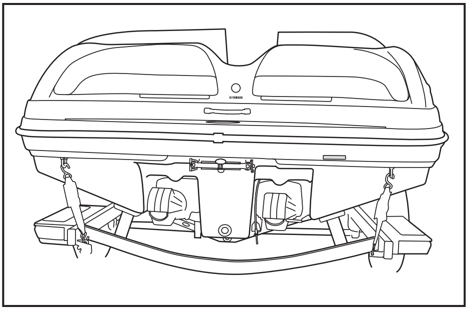

- Take down and store the bimini top, if used. The top is not designed to stay unsecured on the boat at highway speeds. See page 3-13.
- Carry a spare tire for the trailer, along with sufficient tools to change the tire.
- While traveling, check the wheel hubs on the trailer whenever you park. If the hub feels abnormally hot, have the bearing inspected before continuing your trip. On longer trips, it is a good idea to carry a set of spare wheel bearings, seals, and races.
- When making a turn, do not cut corners. The trailer has a smaller turning circle so it turns more sharply around the corner than the towing vehicle.
- Before backing your trailer into the water, disconnect the light plug from the towing vehicle. This will reduce the likelihood of the lights blowing out when submerged.

BACKING YOUR TRAILER

It takes practice to back a trailer successfully. If you are not familiar backing up with a trailer, practice first in an open area away from obstacles.

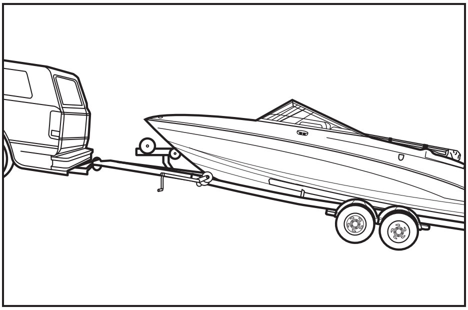

Keep the following points in mind:

- Back slowly. Make steering adjustments in small steps.
- Turn the towing vehicle's wheels opposite the direction you want the trailer to go.
- After the trailer begins moving, turn the towing vehicle to follow it.
- Have a second person stand by to help direct you with hand signals.

LAUNCHING

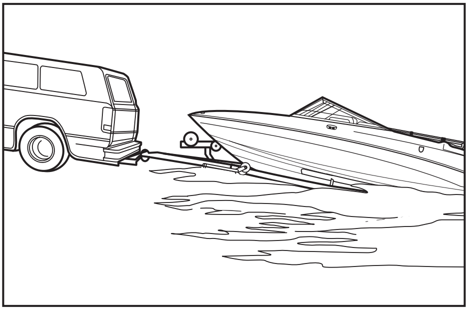

As a courtesy to other boaters, prepare your boat for launching before using the ramp.

Each launch may have particular differences, such as ramp angle, prevailing wind, waves, and water currents. If possible, watch a couple of boaters launch their boats first to notice any problems. While every boater develops a preferred launch procedure, here is a recommended general procedure:

1) Perform the Pre-Operation Checks shown on page 3-4 that can be performed on land, including operating the blower for at least 4 minutes.

2) Remove all trailering tie-down lines from the boat and attach your docking lines and fenders, if used.

3) Back the trailer down the ramp as close to 90° to the shoreline as you can. If possible, have a second person stand aside as an observer. Stop when the wheels are at least halfway submerged. Set the parking brake.

4) Remove the bow line from the bow eye.

5) Back the trailer farther into the water until just the tops of the fenders show, then reset the parking brake. Board the boat and start it. If possible, remain on the trailer until the engines are warm and are responding to throttle.

6) Back the boat out into the water, watching carefully for people, other boats, or obstacles.

LOADING

1) Back the trailer down the ramp as close to 90° to the shoreline as you can. If possible, have a second person act as an observer while standing to the side of the boat. Stop when the tops of the trailer's fenders are about 3 inches above the waterline.

2) With the boat moving at the slowest idle speed, guide the boat onto the support rails. Use throttle only if necessary for steering ability. **WARNING! Using too much throttle can cause the boat to jump over the front of the trailer which can result in injury to the boat operator and bystanders. Use only enough throttle to maneuver the boat into the correct position.**

3) Make sure the boat is centered on the support rails and is headed straight for the bow stop (bumper board). Ease the boat forward until the bow rests against the bow stop. ***NOTICE:*** **The winch line is not designed to pull the boat onto the trailer.**

4) Attach and tighten the winch line. ***NOTICE:*** **The winch line should not be the only line securing the bow during trailering. Use the chain along with the winch to secure the boat to the trailer.**

5) Pull the trailer up the ramp out of the way of other boaters. Attach the bow and stern tie-downs. Reconnect the trailer lights.

6) Follow the Post-Operation Checks on page 3-27.

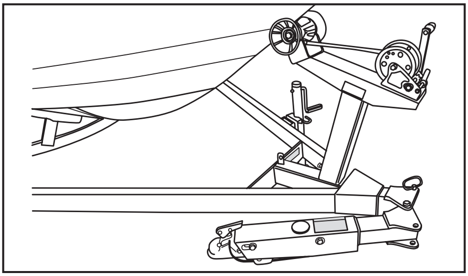

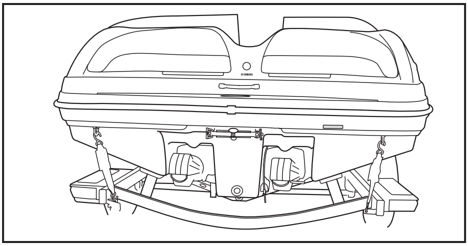

LIFTING

NOTICE:

Do not attach lifting cables to the bow eye, cleats, water-ski tow eye, or grab handles. Serious damage to the boat can occur. Use only a sling designed specifically for lifting boats.

If you need to remove the boat from the water without a trailer, use these guidelines:

- Use a sling-type lifting mechanism designed for lifting boats. The sling should be covered with a protective material to prevent damage to the hull gelcoat.
- Use spreader bars to avoid side stress to the hull that may cause cracks in the gelcoat and fiberglass.
- Attach guidelines to the bow eye and stern tie-down cleats to control movement of the boat during lifting.
- Remove all people and all cargo from the boat. Drain any excess water from the bilge using the bilge pump.
- Be sure all people are standing clear, then lift boat slowly and just far enough to verify that the boat is securely held and properly balanced. If necessary, lower the boat again and adjust the slings.
- When ready, lift the boat slowly and carefully.

Chapter 4

MAINTENANCE AND CARE

STORAGE 4-1
Fuel System 4-1
Cooling System Flushing 4-1
Lubrication 4-2
Battery. 4-3
Cleaning 4-4

ADJUSTMENT AND MAINTENANCE. 4-5
Owner's/Operator's Manual and Tool Kit 4-5
Periodic Inspection Chart 4-6
Spark Plug Cleaning and Adjustment. 4-7
Grease Points 4-8
Fuel System Inspection. 4-10
Fuel Tank. 4-11
Engine Oil/Filter 4-11
Air Filter 4-12
Steering Cable Inspection. 4-13
Controls (Throttle/Shift) 4-14
Reverse Gate Mechanism Inspection. 4-14
Sacrificial Anodes 4-15
Fuse Replacement 4-16
Battery. 4-16

SPECIFICATIONS 4-19
212SS 4-19
212X 4-20

STORAGE

Storing your boat for prolonged periods of time, such as winter storage, requires preventative maintenance to ensure against deterioration. It is advisable to have the boat serviced by an authorized Yamaha Boat dealer before storage. However, the following procedures can be performed by the owner with a minimum of tools.

FUEL SYSTEM

Fill the fuel tank with fresh fuel, adding one ounce of Yamaha Fuel Conditioner and Stabilizer or an equivalent to each gallon of fuel. Do not “top off” the tank, because fuel could spill. A full fuel tank is less likely to allow condensation to collect in the tank, reducing the chance of contaminated fuel. Running the engines with treated fuel during cooling system flushing will also help protect the fuel system.

TIP: Use of Yamaha Fuel Conditioner and Stabilizer eliminates the need to drain the fuel system. Consult your Yamaha dealer or other qualified mechanic if the fuel system is to be drained instead.

COOLING SYSTEM FLUSHING

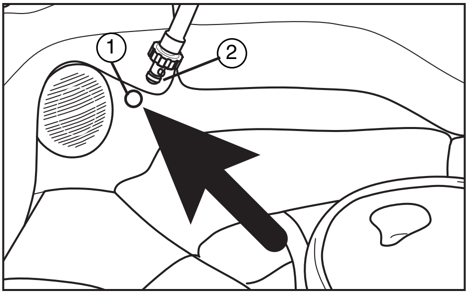

① Flush Hose Connector
② Garden Hose Adapter

Cooling system flushing is essential to prevent the cooling system from clogging up with salt, sand, or dirt.

1) Open the cap for the engine you are going to flush. Press the flush kit garden hose adapter into the flush hose connector and turn until they are securely connected.
2) Start the engine, then immediately turn on the water supply fully.

NOTICE:

- **Never turn on the water before starting the engine. The water could flow back through the muffler into the crankcase causing severe engine damage.**
- **Be sure to turn on the water immediately after starting the engine to prevent engine overheating.**

3) Run the engine at a fast idle for 10 to 15 minutes.

4) Turn off the water supply, then drain residual water from the exhaust system by alternately pushing the throttle lever up to half throttle and back for 10 to 15 seconds. Shut off engine.

NOTICE:

Never have the water on when the engine is not running. The water could flow back through the muffler into the crankcase causing severe engine damage. Do not run the engine for more than 15 seconds after the water supply has been turned off to avoid engine overheating.

5) After stopping the engine, remove the garden hose adapter.
6) Replace the cap securely.
7) Repeat the flushing procedure for the other engine.

LUBRICATION

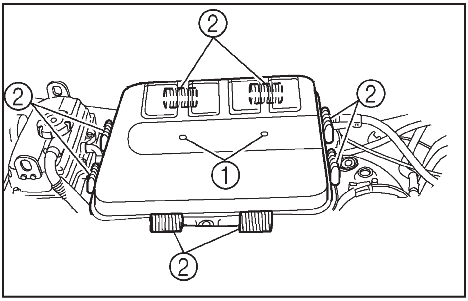

1) Open the hood (see page 2-18).
2) Lift the locking tab ① on the air filter case. Turn the air filter case cap ② counterclockwise and then remove the case cap.
3) Remove the air filter element ③.

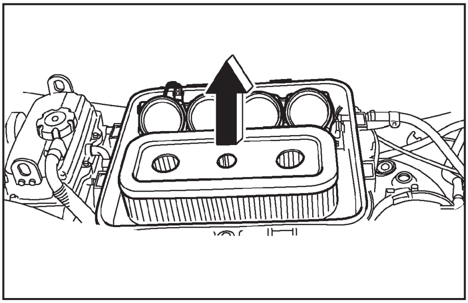

4) Spray a rust inhibitor such as Yamaha Stor-Rite Fogging Oil into the intake opening ④ for 3 seconds. **WARNING! Do not spray flammable rust inhibitor on engine surfaces while the engines are hot. The sprayed substance or propellants could catch fire.**

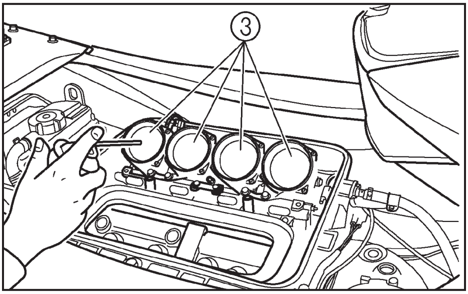

5) Reinstall the air filter. Reinstall the air filter case cap by lifting the tab and turning the cap clockwise until it stops.
6) Start the engine in a well-ventilated area and let it run at a fast idle for 15 seconds.

NOTICE:

Do not run the engine for more than 15 seconds. The engine could overheat.

7) Grease the areas of the boat specified in “Grease Points” in the adjustment and maintenance section.

BATTERY

NOTICE:

With the battery switch in the Off position, the bilge pump will not work, even if the bilge pump switch is in the On position. The bilge could fill with water.

1) When the boat is not to be used for a month or more, remove the battery and store it in a cool, dark place. Clean the battery’s casing and terminals using a mixture of baking soda and water (one tbsp. of baking soda to one cup of water). apply dielectric grease or petroleum jelly to the battery terminals and to all exposed connectors.

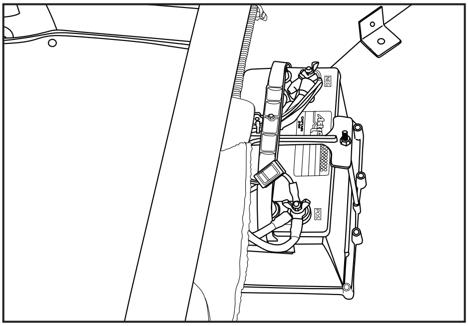

2) If the battery will be stored for a longer period, check the specific gravity of the fluid at least once a month and recharge the battery if it gets too low.

Specific gravity: 1.28 at 20°C (68°F)

For maintenance free (MF) type batteries with sealed cells, check the terminal voltage monthly. When the terminal voltage drops to 12.5 VDC or lower, recharge the battery with an appropriate charger as recommended by the battery manufacturer.

Full charge terminal voltage:
12.7-13.0 VDC per battery manufacturer’s specification

CLEANING

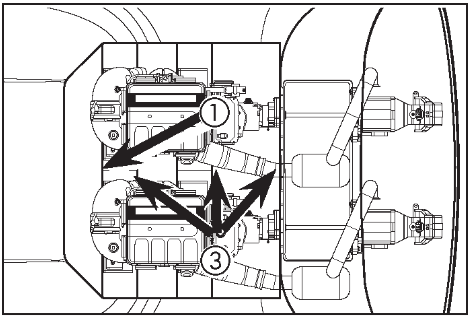

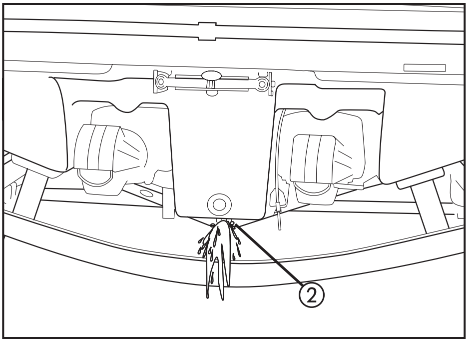

1) Remove the fuel tank compartment drain ① and allow any water to drain into the engine compartment. Reinstall the drain plug.

⚠WARNING

Gasoline and its vapors are highly flammable and explosive. If fuel or a fuel/water mix drains from the fuel tank compartment drain, wipe it up immediately with dry rags. Do not operate the boat until the source of the fuel leak is found and corrected.

2) Remove the drain plugs in the stern ② and engine compartment ③. Wash down the hull, boat interior, and drive units with fresh water, mild natural soap, then rinse.
3) Rinse the engine and bilge areas with fresh water. Drain off all water and wipe up remaining moisture with clean, dry rags. Reinstall the drain plugs.
4) Spray the exterior of the engines with Yamaha Silicone Protectant and Lubricant or an equivalent.
5) Wax the hull with a non-abrasive wax designed for marine gelcoat. **WARNING! Slippery surfaces can cause falls and injury. Be careful not to apply too much wax on deck and gunwale stepping surfaces. This will make them slippery.**
6) Wipe all vinyl and rubber components, such as the seats and engine compartment seals, with a vinyl protectant such as Yamaha Protectant.
7) Vacuum and or hose-off the carpeting (if equipped) as necessary. If needed, use a quality brand-name carpet cleaner product to clean soiled areas. Roll up the carpet face out for storage.

NOTICE:

Always dry the carpet face up. Never roll up the carpet while wet. Never fold the carpet.

8) Wash the fabric of the Bimini top (if equipped) with a mild natural soap in lukewarm water, then rinse. Do not use detergents. Allow to air dry thoroughly before storage. See the label on the Bimini top and the manufacturer's care instructions for more detailed information.

MAINTENANCE AND ADJUSTMENT

⚠WARNING

Be sure to turn off the engines when you perform maintenance unless otherwise specified. If you are not familiar with machine servicing, this work should be done by a Yamaha dealer or other qualified mechanic.

Maintenance, replacement, or repair of the emission control devices and system may be performed by any marine SI engine repair establishment or individual. Warranty repair, however, must be performed at an authorized Yamaha Boat dealership. A service manual is available for purchase through a Yamaha dealer for owners who have the mechanical skills, tools, and other equipment necessary to perform maintenance not covered by this owner's/operator's manual.

OWNER'S/OPERATOR'S MANUAL AND TOOL KIT

It is advisable to always carry the Owner's/Operator's Manual and tool kit with you whenever you use the watercraft.

To protect these materials it would be a good idea to put them in a waterproof bag. If your Owner's Manual is damaged, order a replacement from a Yamaha dealer.

The service information included in this manual is intended to provide you, the owner, with the necessary information for completing your own preventive maintenance and minor repairs. The tools provided in the owner's tool kit are sufficient for this purpose, except that a torque wrench is also necessary for tightening nuts and bolts properly.

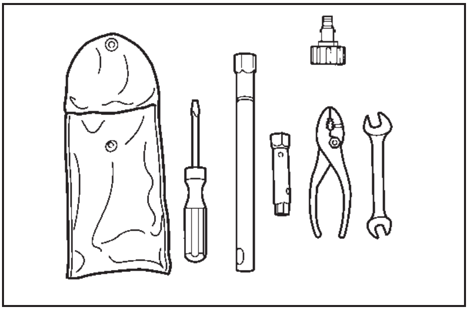

PERIODIC INSPECTION CHART

Frequency of maintenance operations may be adjusted according to the operating conditions, but the following table gives general guidelines.

● Indicates the checkups which you may do yourself.

■ Indicates work to be done by your Yamaha dealer.

	Maintenance Interval	Initial			Thereafter Every		Page
		10 hours	50 hours	100 hours	100 hours	200 hours	
			6 months	12 months	12 months	24 months	
Spark plug	Inspection/Cleaning/ Adjustment	●	●	●	●		4-7
Grease points	Greasing			●	●		4-8
Bearing housing	Greasing	■ *1		● *2	● *2		4-9
Fuel system	Inspection			■	■		4-10
Fuel filter	Checking/Replacement			■	■		
Fuel pump screen	Cleaning			■	■		
Air filter	Inspection/Replacement				●		
Engine oil	Replace	■		■	■		
Engine oil filter	Replace				■		
Valve clearance	Inspection/Adjustment					■	
Cooling-water passages	Cleaning/Flushing	● (after every use)					4-1
Bilge strainer	Cleaning		●	●	●		
Impeller	Inspection		■	■	■		
Steering cable	Inspection					●	4-13
Throttle cable	Inspection/Adjustment			■	■		
Reverse gate mechanism	Inspection						
Sacrificial anode	Checking/ Replace as needed	● (after every use)					4-15
Drain plugs	Inspection/Replacement					●	
Battery	Inspection	● (Inspect fluid level before every launch)					4-16
Rubber coupling						■	
Bolts and nuts	Retightening	■		■	■		

*1 Grease capacity: 33.0 ~ 35.0 cc (1.11 ~ 1.18 oz.)

*2 Grease capacity: 6.0 ~ 8.0 cc (0.20 ~ 0.27 oz.)

SPARK PLUG CLEANING AND ADJUSTMENT

Be careful not to damage the insulator when removing or installing a spark plug. A damaged insulator could allow sparks to escape, which could result in a fire or explosion.

The spark plug is an important engine component and is easy to inspect. The condition of the spark plug can indicate something about the condition of the engine. For example, if one spark plug has a distinctly different color, the engine could require servicing. Do not attempt to diagnose any problems yourself.

Have a Yamaha dealer service the boat. Remove and inspect the spark plugs periodically; heat and deposits will cause the spark plugs to slowly break down and erode. If electrode erosion becomes excessive, or if carbon and other deposits are excessive, replace the spark plug with the specified plug.

Standard spark plug: CR9EB 1 Spark plug gap

To remove a spark plug:

1) Remove the air filter case cover and air filter element. (See page 4-11 for air filter element removal and installation procedures.)
2) Remove the spark plug cap. ***NOTICE:*** **Do not use any tools to remove or install the spark plug cap, otherwise the ignition coil coupler could be damaged. The spark plug cap may be difficult to remove because the rubber seal on the end of the cap fits tightly. To remove the spark plug cap, simply twist it back and forth while pulling it up; to install it, twist it back and forth while pushing it down.**
3) Remove the spark plug. Measure the spark plug gap with a wire thickness gauge. Replace the spark plug or adjust the gap to specification if necessary.

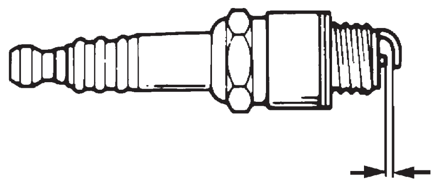

Spark plug gap: 0.7~0.8mm (0.028~0.031 in)

To install a spark plug:

1) Clean the gasket surface.
2) Wipe any dirt from the threads of the spark plug.
3) Install the spark plug, and then tighten it to the specified torque.

Spark plug tightening torque 12.5 Nm (9.2 ft-lb) (1.27 kgf-m)

4) Wipe off any water on the spark plug or inside the spark plug cap, and then install the cap. Push the spark plug cap down until it is securely installed.

GREASE POINTS

To keep moving parts sliding or rotating smoothly, coat them with water resistant grease such as Yamaha Marine Grease, Yamaha Grease A, or an equivalent.

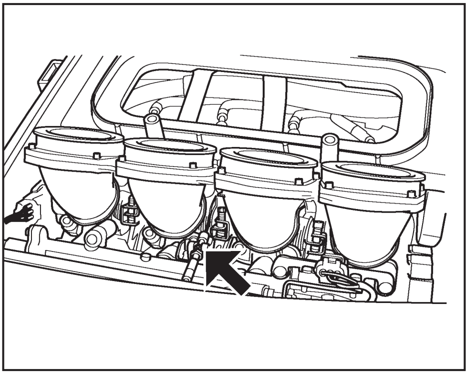

Throttle Cable

Grease the throttle-cable inner wires at the carburetors.

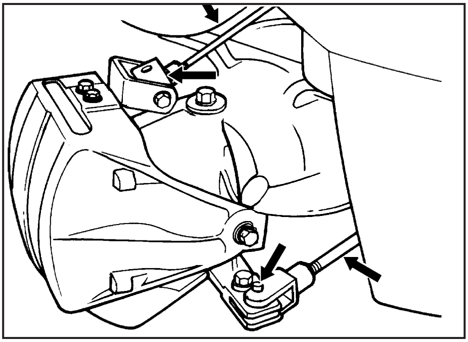

Steering Cable Ball Joints and Inner Wire

Grease the steering cable and shift cables ball joints at the steering nozzles. Extend the steering cable and shift cable inner wires and apply a thin coat of grease to them.

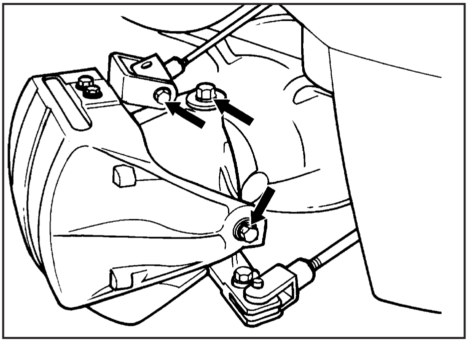

Pivot Points

Grease all pivot points of the steering and shift mechanism at the pump end.

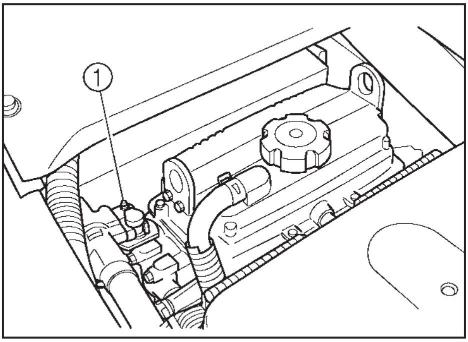

Bearing Housing

① Bearing housing grease nipp

Grease the bearing housing through the grease nipple.

Recommended water-resistant grease: Yamaha Marine Grease, or Yamaha Grease A

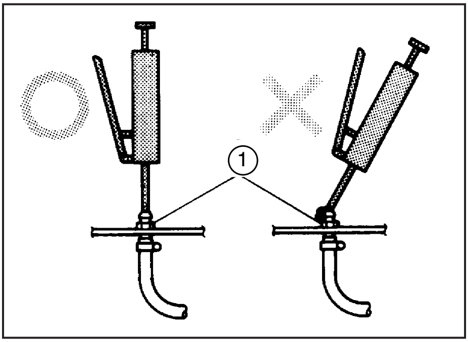

The first service should be done after 10 hours or 1 month by your Yamaha dealer.

Fill the bearing housing with water-resistant grease through the grease nipple.

Grease capacity: 33.0~35.0 cc (1.11~1.18 oz)

After first service: Every 100 hours or 6 months (you may do this yourself).

Grease capacity: 6.0~8.0 cc (0.20~0.27 oz)

NOTICE:

Fill the grease slowly and carefully, because it can damage the hose and the joints.

FUEL SYSTEM INSPECTION

⚠WARNING

Gasoline is highly flammable and explosive. Failure to check for and repair any fuel leakage could result in fire or explosion. A fire or explosion can cause severe injury or death.

When inspecting the fuel system, shut off the engine, do not smoke, and avoid spilling gasoline.

Fuel in hose is pressurized. Fuel can spray out and cause injury or a fire hazard if fuel line is disconnected.

Do not attempt to run engine with fuel line disconnected.

Check the fuel system for leaks, cracks, or malfunctions. If any problem is found, consult a Yamaha dealer.

Checking points:
1. Fuel tank leakage
2. Fuel hose joint leakage
3. Fuel hose cracks or other damage
4. Fuel filler clamps and hoses
5. Fuel tank cap (seal) for damage

The United States Coast Guard requires that all inboard boats like your boat have visual access to fuel filler clamps and hoses. The boat has two access points for this purpose.

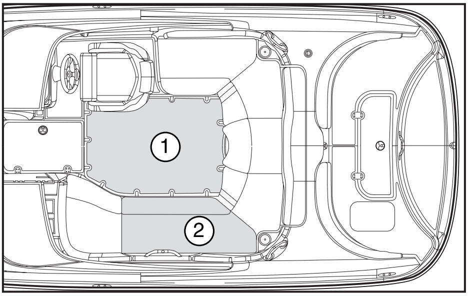

One access point is the floor ①. Remove the floor section to see the fuel tank. The other access point is inside the port-side storage compartment ②. Remove the seat cushion, then look up inside the compartment to see the fuel filler hose and clamp.

FUEL TANK

If the fuel tank needs to be cleaned or when any water is found in the fuel system, take the boat to your Yamaha dealer for service.

ENGINE OIL/FILTER

⚠WARNING

Engine oil is extremely hot after the engine is turned off. Coming into contact with or getting any engine oil on your clothes could result in burns.

NOTICE:

- **Be sure the engine has enough oil but do not overfill. If there is too little oil, the engine can be damaged. If there is too much oil, the air filter can become saturated with oil, permanently damaging the filter and reducing engine performance.**
- **If oil is leaking or the oil-pressure warning indicator comes on when the engine is running, immediately turn the engine off and have a Yamaha dealer check the boat. Continuing to operate under such conditions could cause severe engine damage.**

It is recommended to have a Yamaha dealer change the engine oil and oil filter. However, if you choose to change the oil and oil filter on your own and you have the special equipment necessary to do so, refer to the service manual for this boat.

Dispose of used oil according to local regulations.

AIR FILTER

The air filter element should be checked every 12 months or every 100 hours of operation.

To check the air filter:

1) Open the hood (see page 2-18).
2) Remove the air filter case cover screws ①, slide the locks ② to open, and then remove the case cover.
3) Remove the air filter element. Check it for dirt and oil. Replace the air filter every 2 years or every 200 hours of operation, or if it becomes contaminated with dirt or oil.

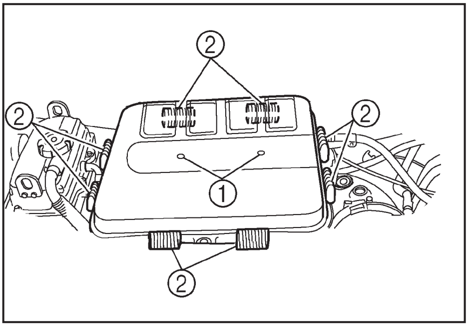

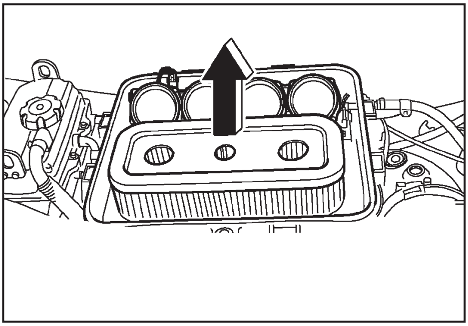

STEERING CABLE INSPECTION

Be sure to check:

1) Check for smooth operation of the wheel and steering nozzles.
2) Check for proper steering adjustment. The nozzles should both point straight back when the steering wheel is centered.

If steering is stiff or misadjusted, ask your Yamaha dealer to service it.

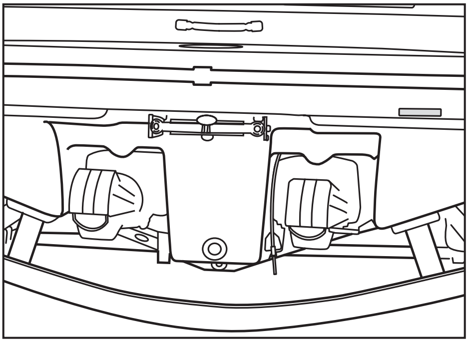

CONTROLS (THROTTLE/SHIFT)

Check the control levers for smooth operation and proper shifting.

1) Remove the engine stop switch cord (lanyard) and ignition keys.
2) Push and pull the control levers through their full range, from Neutral to wide-open throttle Forward and from Neutral to Reverse. Operation should be smooth.
3) While a second person watches from the stern, move the control levers to the Forward position. Check that the shift gates lift completely to the stops.
4) While the second person watches, move the levers back to the Reverse position. Check that the shift gates drop down over the nozzles to the stops.

If the controls do not operate smoothly or correctly, ask your authorized Yamaha Boat dealer for service.

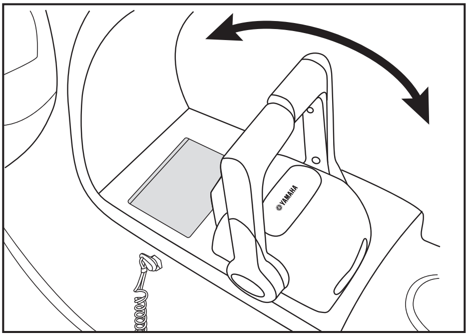

REVERSE GATE MECHANISM INSPECTION

1) Remove the engine stop switch lanyard and ignition keys.
2) Put the throttle levers in the idle position (otherwise the shift lever will not move).
3) Push the shift lever to Forward from the Neutral position while a second person observes shift gate movement from outside the boat. Both shift gates should lift completely to the stops.

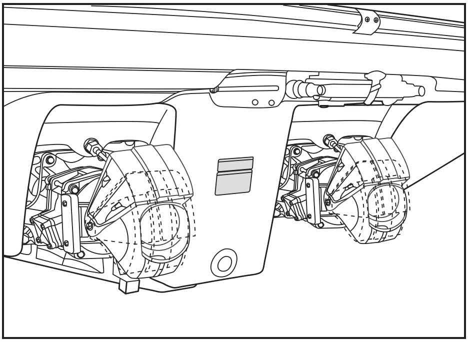

4) Pull the shift lever back from Forward through Neutral to Reverse. The observer should check for proper movement of the shift gates. Both gates should drop down over the nozzles to the stops.

If reverse gates do not operate smoothly or correctly, ask your authorized Yamaha Boat dealer for service.

SACRIFICIAL ANODES

An aluminum alloy anode is mounted on each jet pump outlet on your boat. Galvanic corrosion can damage metal surfaces below the waterline on any boat, particularly in saltwater. These "sacrificial" anodes are designed to erode in these conditions first, before metal components of your jet pump outlets are seriously damaged.

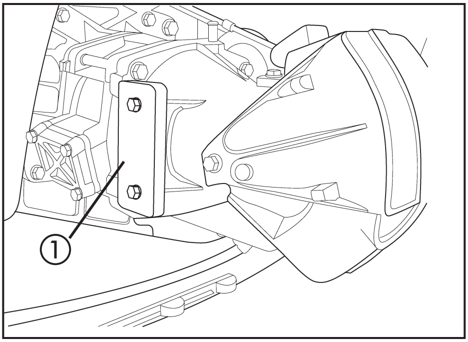

① ANODE

Inspect the anodes each time the boat is removed from the water. It is normal for them to look corroded and rough. Replace the anodes when they are approximately one half of their original size.

NOTICE:

- **Failure to replace anodes when necessary can result in permanent damage to the jet pump outlets and other metal components on the boat.**
- **Never paint the anodes. A coating of any kind will prevent the anode from functioning, exposing other components to galvanic corrosion damage.**

Replacement Procedure

When the anode has eroded to approximately one-half its original size, it should be replaced. Ask your dealer for this service or you can do it yourself if you have a torque wrench of the proper type.

1) Unscrew the two mounting bolts that secure the anode to the jet pump outlet.
2) Clean the mounting-bolts threads, then coat them with Loctite® 242, available from your Yamaha dealer.
3) Install the new anode. Tighten the mounting bolts to specification.

Anode Bolt Torque: 50~80 kgf-cm (47~70 inch-pounds)

FUSE REPLACEMENT

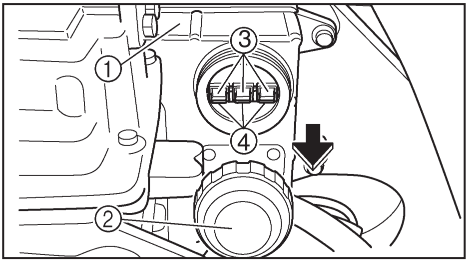

The fuse is in the ignition coil holder. To replace the fuse, unscrew the cap and pull the two red leads out with the fuse holder. Open the fuse holder and replace the fuse.

① Ignition coil holder ③ Fuse (10A)
② Cap ④ Fuse holder

Accessory Fuse

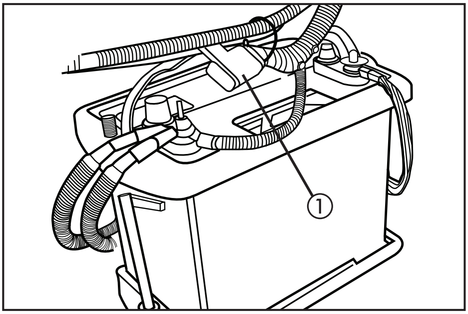

① Fuse (20A)

The fuse is on the red lead wire coming from the battery switch. Open the fuse box and replace the fuse.

⚠WARNING

Do not use fuses of higher amperage that those recommended. Substitution of a fuse of improper rating can cause extensive electrical system damage and possible fire.

BATTERY

These general guidelines apply to many commonly used battery types (but not, for example, to maintenance-free batteries). Consult the battery manufacturer's instructions before performing battery maintenance.

Check the level of the battery fluid and see if the terminals are tight. Add distilled water if the fluid level is low.

NOTICE:

- **Be careful not to place the battery on its side.**
- **Remove the battery from the boat before adding distilled water or recharging.**

⚠WARNING

Battery electrolyte is poisonous and dangerous, causing severe burns, etc. It contains sulfuric acid. Avoid contact with skin, eyes or clothing.

Antidote:

EXTERNAL – Flush with water.

INTERNAL – Drink large quantities of water or milk. Follow with milk of magnesia, beaten egg or vegetable oil. Call physician immediately.

EYES – Flush with water for 15 minutes and get prompt medical attention.

A battery produces explosive gases. Keep sparks, flame, cigarettes, etc., away. Ventilate when charging or using in enclosed space. Always shield eyes when working near batteries.

KEEP OUT OF REACH OF CHILDREN.

Replenishing the Battery Fluid

A poorly maintained battery will deteriorate quickly. The battery fluid should be checked before every outing.

Fill to the manufacturer's recommended level when necessary. Top up only with distilled water (or pure de-ionized water) suitable to use in batteries. ***NOTICE:*** **Normal tap water contains minerals which are harmful to a battery; therefore, refill only with distilled water.**

Recharging

⚠WARNING

- **When charging the battery, keep it well away from sparks and open flames, as it gives off explosive gases.**
- **When using a battery charger, connect the battery to the charger before you turn on the charger. This will prevent sparking at the terminals that could ignite battery gases.**
- **If jump-starting the engine is necessary in an emergency, follow the instructions on page 5-4. Improper jump-starting could cause sparking and explosion.**

1) Remove the caps from the cells. Add distilled water if necessary to top up the electrolyte to the proper level.
2) Follow the battery manufacturer's instructions for charging.

Connecting the Battery Terminals

Always make sure the connections are correct when you install the battery in the boat. Make sure that the breather pipe is properly connected and that it is not damaged or obstructed.

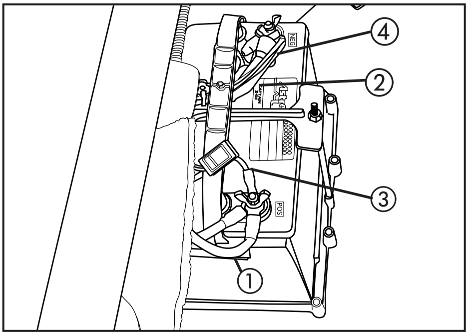

① Positive (+) Battery cable (Red)

② Negative (–) Battery cable (Black)

③ Accessory (+) Lead (Red/Black)

④ Accessory (–) Lead (Black)

NOTICE:

BATTERY REMOVAL: Disconnect battery leads before removing the battery. Disconnect the negative (–) lead first.

BATTERY INSTALLATION: Connect the red (+) lead and accessory red (+) lead to the positive (+) terminal of the battery. Connect the black (–) lead and the black (–) accessory lead to the negative (–) terminal of the battery.

SPECIFICATIONS

ITEM / MODEL	UNIT	212SS: FAT1100C-H
VEHICLE CAPACITY		
Maximum people on board	Number of people	9
Maximum load capacity (persons)	lb.	1675
DIMENSIONS		
Length	feet / inches	21.0' / 252"
Beam	feet / inches	8.6' /102.4"
Draft	inches	16"
Dry weight	lb.	3029
Height on trailer	feet / inches	6.92' / 83"
PERFORMANCE		
Maximum fuel consumption	US gal/h (L / h)	11.9 gal (45) each engine
Cruising range (full throttle)	hr.	2.11
ENGINE		
Number of engines		2
Engine type		4-stroke
Number of cylinders		4 cylinders each engine
Displacement	cc (cu. in)	1052 (64.2) each engine
Bore & stroke	mm (in.)	76 x 58 (2.99 x 2.28)
Compression ratio		11.9:1
Lubrication system		Dry sump
Cooling system		Water-cooled
Starting system		Electric starter
Ignition system		TCI
Spark plug		NGK CR9EB
Spark plug gap	mm (in.)	0.7 ~0.8 mm (0.028"~0.031")
Recommended battery	Qty: 1	Marine Grade Group 24 Dual Purpose 675 Marine Cranking Amp
Battery capacity	Voltage - Amp Hours	12 -100
Charging system		Flywheel magneto
DRIVE UNIT		
Propulsion system		Jet pump
Jet pump type		Axial flow, single stage w/reverse
Impeller rotation		Counter clockwise (rear view)
Impeller pitch		16.5°
Transmission		Direct drive from engine
Steering (nozzle) angle		23° $\pm$ 1°
FUEL AND OIL		
Fuel		Regular unleaded gasoline
Recommended engine oil	API SAE	4-stroke motor oil SE, SF, SG, SH, or SJ 10W-30
Fuel tank capacity	US gal (L)	50.0 gal (189 L)
Oil tank capacity	US qt (L)	4.5 qt (4.3 L) Each engine

SPECIFICATIONS

MODEL / ITEM	UNIT	212X: FAT1100A-H / B-H
VEHICLE CAPACITY		
Maximum people on board	Number of people	9
Maximum load capacity (persons)	lb.	1675
DIMENSIONS		
Length	feet / inches	21' / 252"
Beam	feet / inches	8.6' /102.4"
Draft	inches	16"
Dry weight	lb.	3274
Height on trailer	feet / inches	Tower Up: 10.9'/131" Down: 7.8'/93.25"
PERFORMANCE		
Maximum fuel consumption	US gal/h (L / h)	11.9 gal (45) each engine
Cruising range (full throttle)	hr.	2.11
ENGINE		
Number of engines		2
Engine type		4-stroke
Number of cylinders		4 cylinders each engine
Displacement	cc (cu. in)	1052 (64.2) each engine
Bore & stroke	mm (in.)	76 x 58 (2.99 x 2.28)
Compression ratio		11.9:1
Lubrication system		Dry sump
Cooling system		Water-cooled
Starting system		Electric starter
Ignition system		TCI
Spark plug		NGK CR9EB
Spark plug gap	mm (in.)	0.7 ~0.8 mm (0.028"~0.031")
Recommended battery	Qty: 1	Marine Grade Group 24 Dual Purpose 675 Marine Cranking Amp
Battery capacity	Voltage - Amp Hours	12 -100
Charging system		Flywheel magneto
DRIVE UNIT		
Propulsion system		Jet pump
Jet pump type		Axial flow, single stage w/reverse
Impeller rotation		Counter clockwise (rear view)
Impeller pitch		16.5°
Transmission		Direct drive from engine
Steering (nozzle) angle		23° ± 1°
FUEL AND OIL		
Fuel		Regular unleaded gasoline
Recommended engine oil	API SAE	4-stroke motor oil SE, SF, SG, SH, or SJ 10W-30
Fuel tank capacity	US gal (L)	50.0 gal (189 L)
Oil tank capacity	US qt (L)	4.5 qt (4.3 L) Each engine

Chapter 5

TROUBLE RECOVERY

TROUBLESHOOTING 5-1
Troubleshooting Chart. 5-1

EMERGENCY PROCEDURES 5-3
Towing the Boat 5-3
Running on One Engine 5-3
Jump Starting 5-4
Jet Pump Clean-Out Procedure 5-5

TROUBLESHOOTING

If any trouble happens on your boat, use this section to check for possible cause. If you cannot find the cause or if the procedure for replacement or repair is not described in this owner's manual, ask your Yamaha Boat dealer or qualified mechanic for the proper service.

The Troubleshooting Chart contains: "TROUBLE," "POSSIBLE CAUSE," "REMEDY," and "REFER PAGE."

Check the possible cause and remedy, and also the referred page for the maintenance steps to solve the trouble.

TROUBLESHOOTING CHART

TROUBLE	POSSIBLE CAUSE		REMEDY	PAGE
Starter motor does not turn over	• Fuse	Burned out	• Replace the fuse and check wiring	4-16
	• Battery	Run down	• Recharge	4-17
		Poor terminal connections	• Tighten as required	4-17
		Battery switch off	• Turn on switch	4-18
	• Jet pump cleanout hatch	Not latched	• Latch securely	5-5
	• Starter component	Faulty	• Have serviced at Yamaha dealer	
	• Shift lever	Not in Neutral	• Shift to Neutral	2-7
Starter motor turns over/ engine does not start	• Engine shut-off switch	Clip on cord is not in place	• Install clip in engine shut-off switch	2-6
	• Fuel	Empty	• Refill as soon as possible*	3-2
		Stale or contaminated	• Have serviced at Yamaha dealer	
	• Fuel tank	Water or dust collected	• Have service at Yamaha dealer	
	• Spark plug	Fouled or defective	• Clean or replace	4-7
	• Spark plug cap	Not fitted or loose	• Fit properly	4-7
	• Crankcase	Filled with fuel	• Have serviced at Yamaha Dealer	
		Filled with water	• Crank engine with spark plug out until clean	
	• Fuel filter	Clogged or water collected	• Have serviced at Yamaha Dealer	

TROUBLE	POSSIBLE CAUSE		REMEDY	PAGE
Engine runs irregularly or stalls	• Fuel	Empty	• Refill as soon as possible	3-2
		Stale or contaminated	• Have serviced at Yamaha dealer	
	• Fuel filter	Water or dust collected	• Have serviced at Yamaha dealer	
	• Spark plug	Fouled or defective	• Replace	4-7
		Incorrect heat range	• Replace	4-7
		Gap incorrect	• Adjust	4-7
	• Spark plug cap	Loose	• Fit properly	4-7
		Loose electrical connections	• Tighten or connect properly	4-7
		Cracked, torn or damaged	• Replace	
Engine won't run over 3,000 rpm	• Engine overheat**	Jet intake clogged	• Clean	5-5
		Cooling system clogged	• Clean	4-1
Boat speed too slow or loses power	• Cavitation	Jet intake clogged	• Clean	5-5
	• Engine overheat**	Jet intake clogged	• Clean	5-5
		Cooling system clogged	• Clean	4-1
	• Fuel Filter	Clogged	• Have serviced at Yamaha dealer	
	• Spark plug	Fouled or defective	• Replace	4-7
		Incorrect heat range	• Replace	4-7
		Gap incorrect	• Adjust	4-7
	• Spark plug caps	Loose	• Fit properly	4-7
	• Fuel	Stale or contaminated	• Have serviced at Yamaha dealer	

** Engine speed will be limited to 3,500 rpm by the overheat warning device.

EMERGENCY PROCEDURES

TOWING THE BOAT

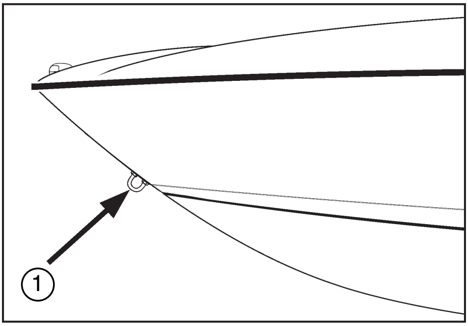

① Bow eye

The boat should be towed only if it becomes inoperative.

The towing rope should be long enough so that the boat will not collide with the towing boat when slowing down. A good rule of thumb is a tow rope which is three times the combined length of the towing boat and the boat.

Tow the boat using the bow eye only. Tow the boat at a “no wake” speed. ***NOTICE:*** **Do not tow the boat at speed fast enough to leave a wake. Severe engine damage could result because water can flood the non-operating engines through the cooling water intake.**

⚠WARNING

- **The operator of the towing boat must keep speed to a minimum and avoid traffic or obstacles which could be a hazard to the driver on the boat.**
- **The operator of the towing boat must keep speed to a minimum and avoid traffic or obstacles which could be a hazard to either boat.**
- **The towing line should be long enough so the towed boat will not collide with the towing boat when slowing down.**

RUNNING ON ONE ENGINE

If one engine becomes inoperative, the properly running engine can be used to return to shore. Operate at a “no wake” speed to prevent water from flooding the non-operating engine through the cooling water intake. The “No-Wake Mode” system can be used for this purpose. (See page 2-14.)

NOTICE:

Do not operate the boat above a “no wake” speed with just one engine. Severe engine damage could result because water can flood the non-operating engines through the cooling water intake.

JUMP STARTING

⚠WARNING

SEVERE INJURY OR DEATH MAY RESULT IF YOU IGNORE ANY OF THE FOLLOWING:

- **If blower will not operate, ventilate engine compartment by opening engine compartment hatch for several minutes before attempting a jump start.**
- **Do not connect the negative (–) jumper cable to the negative (–) terminal of the dead battery. Sparks could ignite battery or fuel vapors, which could cause an explosion.**

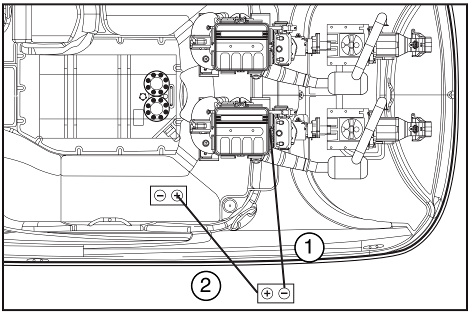

① Negative (–) jumper cable

② Positive (+) jumper cable

If the boat battery runs down, the engines can be started in an emergency using a 12-volt battery and jumper cables.

To connect the jumper cables:

1) Connect the positive (+) terminal of the dead battery to the positive terminal (+)of the booster battery with the positive jumper cable.
2) Connect one end of the negative (–) jumper cable to the negative (–) terminal of the booster battery.
3) Connect the other end of the negative (–) cable to an engine hanger on either side of the engine oil tank.

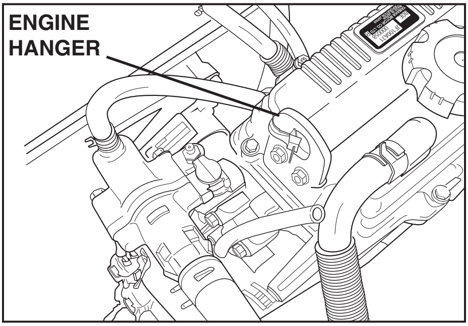

NOTICE:

Be sure all connections are secure and correct before attempting to start the engine. Any wrong connection may damage the electrical system.

4) Start the engine, then disconnect the cables by reversing the above steps.

NOTICE:

Do not turn the starter motor for more than 5 seconds. If the engine does not start in 5 seconds, release the starter switch and try again after 15 seconds. Continuous cranking for more than 5 seconds will discharge the battery and the engine will not start. The starter motor may also be damaged if it is engaged continuously for more than five seconds.

JET PUMP CLEAN-OUT PROCEDURE

⚠WARNING

SEVERE INJURY OR DEATH MAY RESULT IF YOU IGNORE ANY OF THE FOLLOWING:

- **Turn off and remove both ignition keys, remove lanyard, and wait for all movement to stop before removing access port caps.**
- **Never override interlocks to run engine with hatch open.**
- **The impeller has sharp edges. Be careful when reaching into jet pump area.**

If weeds or debris get caught in the intake or impeller, cavitation can occur, and though the engine speed rises, forward thrust will decrease. If this condition is allowed to continue, pump damage can occur and the engines may overheat and seize. If there is any sign that the jet intake or impeller is clogged with weeds or debris, follow this cleanout procedure.

1) Turn off and remove ignition keys, remove lanyard, and wait for all movement to stop.
2) Lift the hatch on the rear platform.

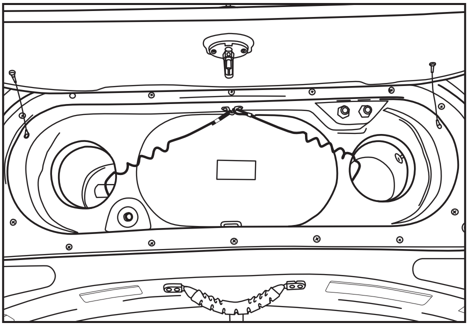

3) Check that the retaining cord is securely attached to the cap and retaining strap. Press the release button and lift the cap up out of the port. Set the cap where it cannot be accidentally knocked overboard.

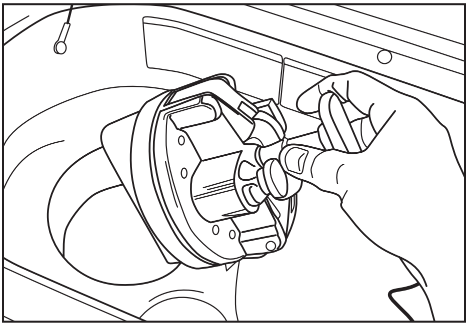

4) Remove any weeds or debris from the drive shaft, impeller, pump housing, and steering nozzle. If you cannot remove the debris, consult your Yamaha Boat Dealer.
5) To reinstall the access port cap, first clean off any sand or other foreign matter from the cap or port surfaces. Insert the cap so that its slot faces the bow and lines up with the projection in the access port wall.

6) Press the T-handle down firmly to lock the cap in place. Pull up forcefully on the handle to be sure it is locked. If a strong pull will move the handle, it is not locked securely – the cap could be forced out by water pressure during operation.

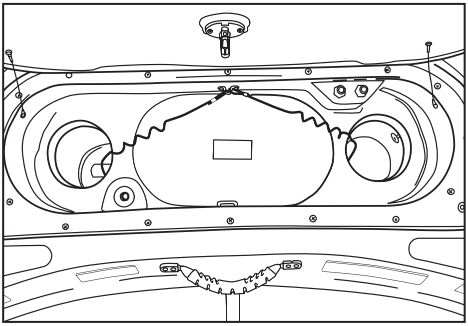

NOTICE:

- **Be sure the caps are locked securely in place. Otherwise the cap could be forced out of the access ports by water pressure, causing loss of performance and possible damage.**
- **The hatch cover has interlocks to shut off the engines should the hatch be accidentally opened during operation. The engines will not restart unless the hatch is closed and latched.**

Chapter 6

CONSUMER INFORMATION & INDEX

LIMITED WARRANTY 6-1

CALIFORNIA EMISSION CONTROL WARRANTY 6-4

YAMAHA EXTENDED SERVICE (Y.E.S) 6-8

BOATING TERMS 6-9

SAMPLE FLOAT PLAN 6-10

INDEX. 6-11

YAMAHA MOTOR CORPORATION, U.S.A.
YAMAHA BOAT LIMITED WARRANTY

Yamaha Motor Corporation, U.S.A. hereby warrants that new Yamaha Boats will be free from defects in materials or workmanship for the period of time stated herein, subject to certain stated limitations.

PERIOD OF WARRANTY: The hull and deck on any new Yamaha Boat purchased for pleasure use from an authorized Yamaha Boat dealer in the United States will be warranted against major structural defects for a period of five (5) years in pleasure use, or for one (1) year in commercial applications. All other Yamaha Boat components will be warranted against defects in material or workmanship, subject to exclusions noted herein, for a period of one (1) year from date of purchase in pleasure use, or ninety (90) days from the date of purchase in commercial applications.

Replacement parts used in warranty repairs will be warranted for the balance of the applicable warranty period.

The warranty described here applies to boats purchased and registered for use in the United States only. For warranty provisions outside the United States, contact that particular country's local Yamaha distributor.

EMISSION CONTROL WARRANTY: Yamaha warrants to the ultimate purchaser and any subsequent owner, that the emission control components on this engine are designed, built and equipped so as to conform at the time of sale with applicable regulations under section 213 of the Clean Air Act and that this engine is free from defects in materials and workmanship which cause said engine to fail to conform with applicable regulations for two (2) years from the date of purchase or 200 hours of operation, whichever comes first, except for certain major emission components, if equipped, which are covered for three (3) years from the date of purchase or 200 hours, whichever comes first. Some states have different emission control warranty provisions. As these vary from state to state, consult your Yamaha dealer or contact Yamaha Customer Relations at 1-800-962-7926 for more information.

OBTAINING REPAIRS UNDER WARRANTY: During the period of warranty, any authorized Yamaha Boat dealer will, free of charge, repair or replace, at Yamaha's option, any parts adjudged defective by Yamaha due to faulty workmanship or material from the factory. All parts replaced under warranty will become the property of Yamaha Motor Corporation, U.S.A.

CUSTOMER'S RESPONSIBILITY: Under the terms of this warranty, the customer will be responsible for ensuring that the boat is properly operated, maintained, and stored as specified in the applicable Owner's Manual.

The owner of the boat shall give notice to an authorized Yamaha Boat dealer of any and all apparent defects within ten (10) days of discovery and make the boat available at that time for inspection and repairs at the dealer's place of business.

GENERAL EXCLUSIONS FROM WARRANTY: This warranty will not cover the repair of damage if the damage is a result of abuse or neglect of the product. Examples of abuse and neglect include, but are not limited to:

1. Racing or competition use, modification of original parts, abnormal strain.
2. Lack of proper maintenance and off season storage as described in the Owner's Manual, installation of parts or accessories that are not equivalent in design and quality to genuine Yamaha parts.

3. Use of lubricants, oils, and fuel/oil mixtures that are not suitable for boat motor use.
4. Damage as a result of accidents, collisions, contact with foreign materials, or submersion.
5. Growth of marine organisms on motor or hull surfaces.
6. Normal deterioration.
7. Gel coat stress cracks.

SPECIFIC PARTS EXCLUDED FROM WARRANTY; Parts replaced due to normal wear or routine maintenance such as oil, spark plugs, fuel filters, impeller and liner, and anodes are not covered by warranty. Charges for transporting the boat to and from an authorized Yamaha Boat dealer are excluded from warranty coverage.

TRANSFER OF WARRANTY: Transfer of the warranty from the original purchaser to any subsequent purchaser is possible by having the boat inspected by an authorized Yamaha Boat dealer and requesting the dealer to submit a change of registration to Yamaha Motor Corporation, USA within ten (10) days of the transfer.

Y***AMAHA MOTOR CORPORATION, USA MAKES NO OTHER WARRANTY OF ANY KIND, EXPRESSED OR IMPLIED. ALL IMPLIED WARRANTIES OF MERCHANTABILITY AND FITNESS FOR A PARTICULAR PURPOSE WHICH EXCEED THE OBLIGATIONS AND TIME LIMITS STATED IN THIS WARRANTY ARE HEREBY DISCLAIMED BY YAMAHA MOTOR CORPORATION, USA AND EXCLUDED FROM THIS WARRANTY.***

SOME STATES DO NOT ALLOW LIMITATIONS ON HOW LONG AN IMPLIED WARRANTY LASTS, SO THE ABOVE LIMITATION MAY NOT APPLY TO YOU. ALSO EXCLUDED FROM THIS WARRANTY ARE ANY INCIDENTAL OR CONSEQUENTIAL DAMAGES INCLUDING LOSS OF USE. SOME STATES DO NOT ALLOW THE EXCLUSION OR LIMITATION OF INCIDENTAL OR CONSEQUENTIAL DAMAGES. SO THE ABOVE EXCLUSION MAY NOT APPLY TO YOU.

THIS WARRANTY GIVES YOU SPECIFIC LEGAL RIGHTS, AND YOU MAY ALSO HAVE OTHER RIGHTS WHICH VARY FROM STATE TO STATE.

YAMAHA MOTOR CORPORATION, U.S.A.
Post Office Box 6555
Cypress, California 90630

WARRANTY QUESTIONS AND ANSWERS

Q. What costs are my responsibility during the warranty period?
A. The customer's responsibility includes all costs of normal maintenance services, non-warranty repairs, accident, and collision damages.

Q. What are some examples of "abnormal" strain, neglect, or abuse?
A. These terms are general and overlap each other in areas. Specific examples include: Running the boat out of oil, operating the boat with a broken or damaged part which causes another part to fail, and so on. If you have any specific questions on operation or maintenance, please contact your Yamaha Boat dealer for advice.

Q. Does the warranty cover incidental costs such as transportation due to a failure?
A. No. The warranty is limited to repair of the boat itself.

Q. May I perform any or all of the recommended maintenance shown in the Owner's Manual instead of having the dealer do them?
A. Yes, if you are a qualified mechanic and follow the procedures specified in the Owner's and Service Manual. We do recommend, however, that items requiring special tools or equipment be done by a Yamaha Boat dealer.

Q. Will the warranty be void or cancelled if I do not operate or maintain my new boat exactly as specified in the Owner's Manual?
A. No. The warranty on a new boat cannot be "voided" or "cancelled." However, if a particular failure is caused by operation or maintenance other than as shown in the Owner's Manual, that failure may not be covered under warranty.

Q. What responsibility does my dealer have under this warranty?
A. Each Yamaha Boat dealer is expected to:
1. Completely set up each new boat before sale.
2. Explain the operation, maintenance, and warranty requirements to your satisfaction at the time of sale, and upon your request at any later date. In addition, each Yamaha Boat dealer is held responsible for his setup, service and warranty repair work.

Q. Is the warranty transferable to second owners?
A. Yes. The remainder of the existing warranty can be transferred upon request. The unit has to be inspected and re-registered by an authorized Yamaha Boat dealer for the policy to remain effective.

CUSTOMER SERVICE

If your boat requires warranty service, you must take it to any authorized Yamaha Boat dealer within the United States. Be sure to bring your warranty registration card or other valid proof of the original date of purchase. If a question or problem arises regarding warranty, first contact the owner of the dealership. Since all warranty matters are handled at the dealer level, this person is in the best position to help you. If you are still not satisfied and require additional assistance, please write:

YAMAHA MOTOR CORPORATION, U.S.A.
CUSTOMER RELATIONS DEPARTMENT
P.O. Box 6555
Cypress, California 90630

CHANGE OF ADDRESS

The federal government requires each manufacturer to maintain a complete, up-to-date list of all first purchasers against the possibility of a safety-related defect and recall. This list is compiled from the purchase registrations sent to Yamaha Motor Corporation, U.S.A. by the selling dealer at the time of your purchase.
If you should move after you have purchased your new boat, please advise us of your new address by sending a postcard listing your Yamaha model name, engine number, dealer number [or dealer's name] as it is shown on your warranty card, your name and new mailing address.
Mail to:

YAMAHA MOTOR CORPORATION, U.S.A.
WARRANTY DEPARTMENT
P.O. Box 6555
Cypress, California 90630

This will ensure that Yamaha Motor Corporation, U.S.A. has an up-to-date registration record in accordance with federal law.

YAMAHA MARINE ENGINES
CALIFORNIA EMISSION CONTROL WARRANTY STATEMENT
YOUR WARRANTY RIGHTS AND OBLIGATIONS

The California Air Resources Board and Yamaha Motor Corporation, U.S.A., are pleased to explain the emission control system warranty on your 2001 and later outboard, personal watercraft, or boat equipped with a personal watercraft engine. In California, new outboard or personal watercraft engines must be designed, built, and equipped to meet the State's stringent anti-smog standards. Yamaha must warrant the emission control system on your outboard, personal watercraft, or boat equipped with a personal watercraft engine for the periods of time listed below provided there has been no abuse, neglect, or improper maintenance of your outboard or personal watercraft engine.

Your emission control system may include parts such as the carburetor or fuel injection system, the ignition system, and catalytic converter. Also included may be hoses, belts, connectors and other emission-related assemblies.

Where a warrantable condition exists, Yamaha Motor Corporation, U.S.A. will repair your outboard or personal watercraft engine at no cost to you, including diagnosis, parts and labor.

MANUFACTURER'S WARRANTY COVERAGE:
Select emission control parts from model year 2001 and later outboard or personal watercraft engines are warranted for 4 years, or for 250 hours of use, whichever occurs first. However, warranty coverage based on the hourly period is only permitted for outboard engines and personal watercraft equipped with appropriate hour meters. If any emission-related part on your engine is defective under warranty, the part will be repaired or replaced by Yamaha Motor Corporation, U.S.A.

OWNER'S WARRANTY RESPONSIBILITIES:

- As the outboard, personal watercraft, or boat equipped with a personal watercraft engine owner, you are responsible for the performance of the required maintenance listed in your owner's manual. Yamaha recommends that you retain all receipts covering maintenance on your outboard or personal watercraft engine, but Yamaha cannot deny warranty solely for the lack of receipts or your failure to ensure the performance of all scheduled maintenance.

- As the outboard, personal watercraft, or boat equipped with a personal watercraft engine owner, you should however be aware that Yamaha may deny you warranty coverage if your outboard or personal watercraft engine or a part has failed due to abuse, neglect, improper maintenance or unapproved modifications.

- You are responsible for presenting your outboard, personal watercraft, or boat equipped with a personal watercraft engine to a Yamaha distribution center as soon as a problem exists. The warranty repairs should be completed in a reasonable amount of time, not to exceed 30 days.

If you have any questions regarding your warranty rights and responsibilities, you should contact Yamaha Motor Corporation, U.S.A. at 1-800-962-7926.

Yamaha Motor Corporation, U.S.A. warrants to the ultimate purchaser and each subsequent purchaser thereafter that each new 2001 and later outboard, personal watercraft, or boat equipped with a personal watercraft engine certified for sale and sold in California is:

1. Designed, built, and equipped so as to conform, at the time of sale, with all applicable regulations adopted by the California Air Resources Board, and

2. All warranted parts are free from defects in material and workmanship for the warranty period of the outboard or personal watercraft or the period prior to the first scheduled replacement point of the warranted part as required by the maintenance schedule, if applicable, whichever is less. A defect exists when a deficiency in material or workmanship is such that an emission-related part does not function as designed.

The warranty begins on the date that the outboard, personal watercraft, or boat equipped with a personal watercraft engine is delivered to an ultimate purchaser or on the date it is first put in service.

WARRANTED PARTS INCLUDE the following (as applicable):

1. Fuel Metering System
   Carburetor and internal parts (or fuel injection)
   Air/fuel ratio feedback and control system
   Cold start enrichment system
   Intake valves

2. Air Induction System
   Controlled hot air intake system
   Intake manifold
   Supercharger
   Charge air cooler
   Air filter

3. Ignition System
   Spark plugs*
   Magneto or electronic ignition system
   Spark advance/ retard system
   Ignition coils and/or module
   Ignition wires

4. Exhaust Gas Recirculation (EGR) System
   EGR valve body, & carburetor spacer if applicable
   EGR rate feedback & control system

5. Air Injection System
   Air pump or pulse valve
   Valves affecting distribution of flow
   Distribution manifold

6. Catalyst or Thermal Reactor System
   Catalytic converter
   Thermal reactor
   Exhaust manifolds
   Exhaust valves
   Exaust system

7. Particulate controls
   Traps, filters, precipitators, and any other device used to capture particulate emissions

8. Miscellaneous Items Used in Above Systems
   Vacuum, temperature, and time sensitive valves and switches
   Electronic controls
   Hoses, belts, connectors, and assemblies

9. Lubrication System
   Oil pump and internal parts
   Oil injection system

* The original spark plug(s) are warranted for the period of replacement indicated in the Owner's Manual and not the useful life of the outboard or personal watercraft engine (see Owner's Manual).

DURING THE PERIOD OF THIS WARRANTY
Yamaha Motor Corporation, U.S.A. will repair or replace any warranted part deemed defective by Yamaha during the scope of the warranty without charge to the owner, including parts, labor, and diagnosis. This work must be done at an authorized Yamaha dealer. Give notice to an authorized Yamaha dealer of any apparent defect(s) within a reasonable period of time after discovery. The outboard, personal watercraft, or boat equipped with a personal watercraft engine, must be made available for inspection by an authorized Yamaha dealer.

OWNER'S RESPONSIBILITY: The owner of the outboard motor, personal watercraft, or boat equipped with a personal watercraft engine is responsible for the performance of required maintenance (see your Owner's Manual). Receipts and maintenance records covering the performance of regular maintenance should be retained in the event questions arise concerning maintenance. The receipts should be transferred to each subsequent owner of this outboard, personal watercraft, or boat equipped with a personal watercraft engine.

The emission control systems of your Yamaha outboard motor or personal watercraft engine were designed, built, tested, and certified as being in conformity with California emission control regulations using genuine Yamaha parts. It is recommended that any replacement parts(s) used for maintenance, replacement, or repair of emission control systems be Yamaha parts. The owner may elect to have maintenance, replacement, or repair of the emission control devices and systems performed by any repair establishment or individual, and may elect to use parts other than Yamaha parts for such maintenance, replacement, or repair without invalidating this warranty. However, the cost of such service or parts will not be covered under the warranty.

EXCLUSIONS: No warranty coverage will be allowed if the part(s) failure was caused by owner/operator abuse, neglect, tampering, improper adjustment unless performed by a dealer during warranty repair work, modification, misuse, alteration, or improper maintenance (see your Owner's Manual).

Use of parts which are not qualitatively equivalent to genuine Yamaha parts, improper service, or lack of required maintenance which causes failure of a warranted part may constitute abuse and/or improper service, thereby invalidating warranty liability hereunder.

This warranty does not cover damage resulting from accidents, acts of nature, or other events or occurrences beyond the control of Yamaha. Yamaha Motor Corporation, U.S.A. expressly disclaims responsibility for any and all consequential damages, such as loss of time, inconvenience, loss of use of the outboard motor, personal watercraft, or boat equipped with a personal watercraft engine, or commercial loss.

Yamaha Motor Corporation, U.S.A.
P.O. Box 6555
Cypress, CA 90630

Rev 7/08

YAMAHA EXTENDED SERVICE

Keep your Yamaha Boat protected even after the 1-year warranty coverage provisions expire with genuine Yamaha Extended Service (Y.E.S.).

Y.E.S. is designed and administered by Yamaha Motor Corporation to provide maximum owner satisfaction. You get uninterrupted factory-backed coverage for extra peace of mind.

- Y.E.S. is flexible. You choose the plan that's right for you: 12 months, 24 months, or 36 months beyond the 1-year warranty coverage period. That means you can get up to 5 years of coverage on the power train, controls, and other components to match the comforting 5-year standard protection on the hull.
- Y.E.S. is designed and administered by the same Yamaha people who handle your warranty–and it shows in the comprehensive coverage benefits. There are no limitations on hours of use. Coverage isn't limited to "moving parts" or the "drive train" like many other plans. And Y.E.S. covers manufacturing defects just like the warranty. See the sample contract at your Yamaha dealer to see how comforting uninterrupted factory-backed protection can be.
- You don't have to pay anything for covered repairs. There's no deductible to pay, and repairs aren't "prorated." You don't have any "out-of-pocket" expenses for covered repairs.
- In addition, Travel and Recreation Interruption Protection (TRIP) is included at no extra cost. TRIP gives you up to $150 reimbursement per occurrence for any reasonable expenses you incur because your Yamaha needs covered service: replacement vehicle rental, emergency towing, phone calls, even food and lodging when you are away from home. This superb coverage goes into effect when you purchase Y.E.S., so it applies to any warranty repairs as well as covered repairs during your entire Y.E.S. plan period.
- Y.E.S. coverage is honored at any authorized Yamaha dealer nationwide.
- Y.E.S. coverage is transferrable to a new owner if you sell or trade-in. That can make your Yamaha Boat much more valuable!

This excellent Y.E.S. plan coverage is only available to Yamaha owners like you, and only while your Yamaha is still within the first year of the Yamaha Limited Warranty period. So visit your authorized Yamaha dealer to get all the facts. He can show you how easy it is to protect your investment with Yamaha Extended Service. We urge you to act now. You'll get the excellent benefits of TRIP coverage right away, and you'll rest easy knowing you'll have strong factory-backed protection even after your Yamaha Limited Warranty expires. See your dealer today!

A special note:

If visiting your dealer isn't convenient, contact Yamaha with your Primary ID number or Hull Identification Number. We'll be happy to help you get the Y.E.S. coverage you need.

Yamaha Service Marketing
P.O. Box 6555
Cypress, CA 90630
1-(866)-YES-EXTD
(1-866-937-3983)

BOATING TERMS

TERM	DEFINITION
Bow	The front part of the boat.
Deck	The “floor” or upper structure which covers the hull.
Give-Way	The vessel which must yield the right-of-way when two boats meet.
Gunwale	The meeting junction of the deck and hull; the upper edge around the boat. Pronounced “gun’l.”
Hatch	An opening in the deck which provides access below.
Helm	The steering console.
Hull	The basic part of the boat; the under side.
Lanyard	The cord or tether that connects the operator to the engine stop switch so the engines will stop if the operator accidentally leaves the helm.
PFD	A Personal Flotation Device, also known as “life jacket.”
Planing	Traveling at a speed fast enough so the boat has leveled out and is skimming on top of the water. There is a wake.
Port	The left side of the boat.
Stand-On	The vessel with the right-of-way when two boats meet.
Starboard	The right side of the boat.
Stern	The back part of the boat.
Sub-Planing	Traveling at a medium speed. The bow of the boat is out of the water, but you are still traveling through the water. There is a wake.
Transom	The vertical part of the stern.
Trolling	Traveling at idle speed, using little or no throttle. The boat is down in the water and it is not leaving a wake.
Wake	The visible track of disturbed water that the boat leaves behind as it moves in the water.

SAMPLE FLOAT PLAN

Leave a float plan with a responsible person on shore before boating. The example below can be copied and used.

FLOAT PLAN		
VESSEL INFORMATION		
BOAT MAKE: **Yamaha**		MOTOR TYPE: **Jet**
MODEL:		
LENGTH:		REGISTRATION NO:
DECK COLOR:		HULL COLOR:
PASSENGER		
OPERATOR ADDRESS:		EMERGENCY PHONE:
PASSENGER #1: ADDRESS:		EMERGENCY PHONE:
PASSENGER #2: ADDRESS:		EMERGENCY PHONE:
PASSENGER #3: ADDRESS:		EMERGENCY PHONE:
PASSENGER #4: ADDRESS:		EMERGENCY PHONE:
DEPARTURE INFORMATION		
POINT OF DEPARTURE:		DATE/TIME:
TOW VEHICLE MAKE / MODEL	LICENSE:	TRAILER LICENSE:
DESTINATION INFORMATION		
DESTINATION:	LORAN OR GPS COORDINATES:	INTENDED ACTIVITY:
EXPECTED RETURN	DATE:	TIME:
LOCAL U.S. COAST GUARD PHONE #:		
NOTES:	HULL COLOR:	
OPERATOR ADDRESS:		EMERGENCY PHONE:
PASSENGER #1: ADDRESS:		EMERGENCY PHONE:

A

Access Port Caps . . . 3-6, 5-5
Adjustment and Maintenance . . . 4-5
Age Limit . . . 1-8
Air Filter . . . 4-12
Anchor . . . 1-9
Anchoring . . . 3-25
Anodes . . . 4-15
Apparel . . . 1-11

B

Bad weather operation . . . 1-10
Ballast system . . . 2-16
Battery . . . 3-7, 4-3, 4-16
Beaching . . . 3-23
Bearing housing . . . 4-9
Bilge pump . . . 2-14, 3-8
Bimini top . . . 3-11, 3-13, 4-4
Bimini top extension (212X) . . . 3-14
Bladders (ballast) . . . 2-16
Blower . . . 2-14, 3-9
Boarding from a dock or landing jetty . . . 3-22
Boarding from the Bow . . . 3-22
Boarding from the water . . . 3-21
Boat characteristics . . . 1-12
Boat education and training . . . 1-20
Boating safety information . . . 1-20
Boating terms . . . 6-9
Bow eye . . . 2-2, 3-24, 3-29, 5-3
Brakes, not having . . . 3-23
Break-in procedure . . . 3-18
Buoys and other markers . . . 1-18

C

California Emission Control Warranty . 6-4
Capacity limit . . . 1-8
Carbon monoxide . . . 1-12, 3-15
Caution labels . . . 1-4, 1-7
Change of address (warranty) . . . 6-3
Checks:
  Access port caps . . . 3-6, 5-5
  Battery condition . . . 3-7, 4-3, 4-16
  Bilge . . . 3-8
  Cooling water pilot outlets . . . 3-10
  Engine compartment . . . 3-9
  Fire extinguisher . . . 3-6
  Fuel leak . . . 3-8, 3-9, 4-4, 4-10
  Fuel/oil level . . . 3-7
  Jet intake . . . 3-7, 5-5
  Pre-operation checks . . . 3-4
  Post-operation checks . . . 3-27
  Steering . . . 2-5, 3-5, 4-13
  Throttle . . . 3-5, 4-14
Checklists . . . 1-9, 3-4, 4-6, 5-1
Circuit breakers and fuses . . . 2-15, 4-16
Cleaning . . . 4-4
Cleaning jet pump, intake, and impeller . . . 5-5
Cleats . . . 2-3
Collapsing the wakeboard tower . . . 2-22
Connecting battery terminals . . . 4-17
Connecting jumper cables . . . 5-4
Control levers . . . 2-7
Cooling system flushing . . . 4-1
Cooling water pilot outlets . . . 2-13, 3-10
Cord, Engine Shut-off . . . 1-12, 2-6, 3-10, 3-16, 5-1
Crossing (Rules of the Road) . . . 1-16
Cruising limitations . . . 1-10
Customer's responsibility (warranty) . . 6-1
Customer Service (warranty) . . . 6-3

D

Deck drain 3-7
Deep alarm. 2-12
Depth finder 2-10
Docking. 3-22
Drain plugs 3-8, 3-28, 4-4
Draining the bilge 3-8, 3-28, 4-4

E

Electrical box 2-1, 4-16
"Emergency" procedures 5-3
Engine compartment 2-1, 3-9
Engine hood 2-18
Engine oil 3-2, 3-3, 4-11, 4-19, 4-20
Engine serial numbers 1-1
Engine shut-off cord 1-12, 2-6, 3-10, 3-16, 5-1
Enjoy your boat responsibly 1-20
Exclusions from warranty 6-1

F

Filling the gasoline tank 3-2
Filter, air 4-12
Filter, oil 4-6, 4-11
Fire extinguisher. 1-9, 3-6
Float plan 1-10, 6-10
Flush hose connector. 2-1, 4-1
Flushing the engine 4-1
Flushing the hull. 4-4
Fogging engine with oil. 4-2
Free accelerator 2-8
Fuel and engine oil . . 3-1, 3-2, 4-19, 4-20
Fuel conditioner and stabilizer 4-1
Fuel level gauge 2-10
Fuel requirements. 3-1, 4-19, 4-20
Fuel system inspection 4-10
Fuel tank. 4-11
Fuel tank capacity. 3-2, 4-19, 4-20
Fuel tank filler cap 2-9
Fuse replacement. 4-16
Fuses and circuit breakers 2-15, 4-16

G

Garden hose adapter 4-1
Gasoline 3-1
Gauges. 2-9
Getting to know your boat 3-19
Grease 4-8
Grease nipples 4-9
Grease points 4-8

H

Hood latch 2-18
Horn 1-9, 1-17, 3-10
Hull Identification Number 1-1

I

Identification number records 1-1
Ignition switches 2-6, 3-14
Important labels 1-4
Intake grates. 1-13, 3-7, 5-5

J

Jet intakes 1-13, 3-7, 5-5
Jet nozzles . . . 1-12, 1-13, 3-5, 3-19, 4-14
Jet propulsion 1-12, 3-20
Jet pump clean-out procedures 5-5
Jet pump cover. 5-5
Jumps. 1-10

L

Ladder . . 2-3, 2-4, 2-18, 2-21, 3-21, 3-22
Lanyard (engine shut-off cord) 1-12, 2-6, 3-10, 3-16, 5-1
Launching. 3-31
Lights 1-9, 1-13, 2-2, 2-14, 3-9

Limit on running engine out of water . . 4-2

Limit on starter motor running period 3-17

Limitations on who may operate boat. 1-8

Load limit 1-8

Location of labels 1-4

Location of main components 2-1

Lubrication 3-2, 3-3, 4-2, 4-8

M, N

Main switches. 2-6

Meeting other vessels (Rules of the Road) 1-15

Modifications. 1-11, 4-5, 6-1

Night operation. 1-13

No-wake mode 2-14

O

Obtaining repairs under warranty. . . . 6-1

Oil filter 4-6, 4-11

Oil filter replacement. 4-11

Oil tank 2-1, 3-2, 3-3, 4-11

Oil filling 3-2, 4-11

Operation 3-15

Operation of controls and other functions 2-5

Operational requirements. 1-11

Overheat warning system. 2-13

Overtaking another vessel (Rules of the Road) 1-17

P, Q

Passengers. 1-11, 3-21

Period of warranty 6-1

Periodic inspection chart 4-6

Personal Flotation Devices 1-9, 1-11, 1-14, 3-19

Post-operation checks 3-27

Pre-operation checklist 3-4

Pre-operation checks 3-5

Primary Identification number. 1-1

Protective apparel. 1-11, 1-14

R

Reading owner's manual 1-8

Recharging battery. 4-17

Replenishing the battery fluid. 4-17

Reverse gate. 2-9, 3-5, 4-14

Reverse operation 1-13, 2-9

Rough water operation. 1-10

Rules of the Road. 1-15

Rules when encountering other vessels 1-16

S

Sacrificial anodes. 4-15

Safety information. 1-8

Seat grips. 1-11, 2-2

Seating positions 1-11

Self-bailing deck. 3-7

Shallow alarm. 2-11

Shallow water operation 1-10, 2-11, 3-15, 3-24

Shift 2-7, 3-5

Spark plug 2-1, 4-7, 4-19, 4-20

Specific parts excluded from warranty. 6-1

Specifications. 4-19, 4-20

Speedometer 2-9

Starting the engines. 3-15

Steering 2-5, 3-5, 3-20

Steering and sailing rules and sound signals. 1-15

Steering cable ball joints and inner wire 4-8

Steering inspection. 3-5, 4-13

Steering pivot points, greasing 4-8
Steering wheel
tilt adjustment 2-5
Stern light 1-13, 2-2, 2-14, 3-9
Stopping 3-23
Stopping the engines 3-17
Storage 4-1
Storage compartments 2-18
Swimmers and traffic 1-10, 1-12, 3-19
Switches 2-4, 2-6, 2-14

T

Tachometers 2-9
Throttle/shift 1-12, 2-7, 3-5, 3-20
Throttle cable inspection 4-14
Throttle levers 2-7, 3-5
Thrust used for turning 1-12, 3-20
Tilt adjustment, steering 2-5
Tool kit 1-9, 4-5
Tow rope length 1-14, 5-3
Towing the boat 5-3
Trailering 2-17, 3-29
Trolling speed 3-20, 6-9
Troubleshooting 5-1
Turning 1-12, 2-5, 3-5, 3-20

U, V

United States Coast Guard 1-19
Ventilating engine
compartment 2-14, 3-9, 5-4

W, X

Wakeboard tower 2-21
Wakeboarding 1-14, 2-20, 3-18
Warning labels 1-4, 1-5, 1-6, 1-7
Warranty 6-1
Warranty period 6-1
Warranty questions and answers 6-3
Water-skiing 1-14, 3-19
Wetsuit 1-14, 3-19

Y, Z

Yamaha Extended Service (Y.E.S.) . . 6-8

YAMAHA

©2008 YAMAHA MOTOR CORPORATION, U.S.A.

Printed in U.S.A.

LIT-18626-08-23